CALC. BY: DATE:	LAKE COUNTY LAK-20-2.70	OHIO
CHKD. BY: DATE:		FHWA REGION 5
		FEDERAL PROJECT

49 / 98

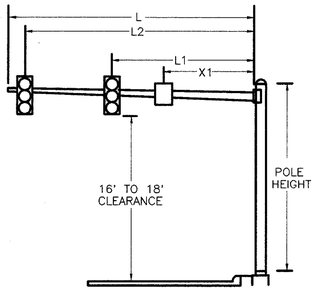

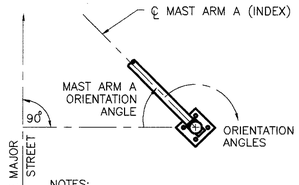

NOTES:
1. ALL ANGLES MEASURED CLOCKWISE.
2. BASE PLATE IS ORIENTED SQUARE TO MAST ARM A (LARGEST ARM) EVEN IF SUPPORT HAS TWO MAST ARMS.

SUPPORT NO.	SIGNAL SUPPORT TC-81.20 TC-12.30: POLE DESIGN NO. TC-81.20	TC-12.30	ARM DESIGN NO.	POLE HEIGHT (FT)	FOUNDATION STATION	FOUNDATION OFFSET	L (FT.)	L 1 (FT.)	L 2 (FT.)	L 3 (FT.)		X 1 (FT.)	MAST ARM A ANGLE (DEG.)	ORIENTATION ANGLES (DEG.) FROM MAST ARM "A": MAST ARM B	PEDESTRIAN SIGNALS	PEDESTRIAN PUSH BUTTONS	POWER SERVICE	CONTROLLER	LUMINAIRE BRACKET	HANDHOLE	CABLE ENTRANCE (12" FROM TOP)		
P1	11		11	20'	139+20	57'L	42	30	41				90							180			
P2	PED			8'	139+34	49'L									0	0				180			
P3	2		2	20'	139+33	37'R	29	15	28				0		180	180				180			
P4	3		3	20'	138+35	45'R	35	21	34				90		0/270	0/270				180			
P5	4		4	20'	138+13	50'L	37	22	36				0		0/270	0/270				180			

ORIENTATION ANGLE CHART

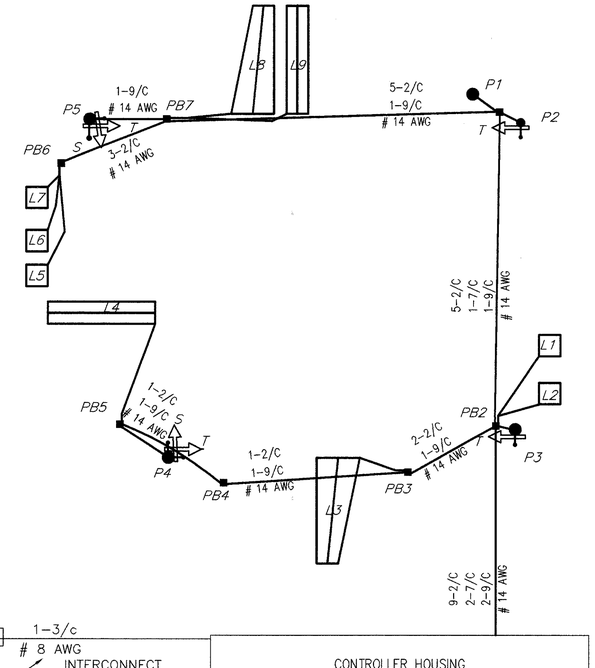

NOTES:
1. PHASE SPLITS SHALL INCLUDE ALL GREEN PLUS YELLOW & ALL RED
2. PERMISSIVES SHALL START AT THE ZERO POINT OF THE CYCLE
3. OFFSETS SHALL BE REFERENCED TO THE BEGINNING OF PHASE 2 YELLOW

	DIAL 1	DIAL 2	DIAL 3
CYCLE LENGTH	100	120	110
PHASE 1 SPLIT	14 %	11 %	14 %
PHASE 2 SPLIT	57 %	65 %	60 %
PHASE 4 SPLIT	29 %	24 %	26 %
PERMISSIVE	10 %	10 %	10 %
OFFSET	4 %	8 %	0 %
TIME OF DAY SCHEDULE	ALL OTHER TIMES	6:30AM TO 9:00AM MON-SAT	3:30PM TO 6:30PM MON-SAT

COORDINATION TIMING

FUNCTION	ø1	ø2	ø4
MINIMUM GREEN	7	33	8
PED WALK	–	7	7
PED CLEARANCE	–	26	21
GREEN EXTENSION	3.0	3.0	3.0
MAXIMUM GREEN	8	59	28
YELLOW CLEARANCE	3.6	3.6	3.4
ALL RED CLEARANCE	1.2	1.2	1.9
RECALL	NONE	PED	NONE

SIGNAL TIMING

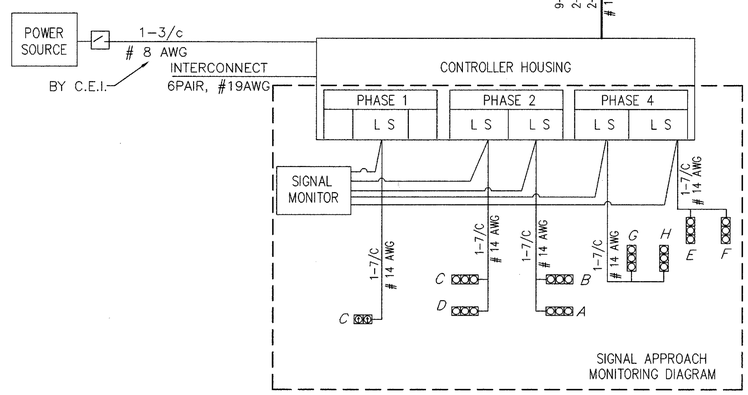

WIRING DIAGRAM

SIGNAL HEAD	ø1 R/W	ø1 CLEAR		ø2 R/W		ø2 CLEAR		ø4 R/W		ø4 CLEAR		FLASH
A	R	R	R	G	G	Y	R	R	R	R	R	Y
B	R	R	R	G	G	Y	R	R	R	R	R	Y
C	G/G	G/G	G	G	G	Y	R	R	R	R	R	Y
D	G	G	G	G	G	Y	R	R	R	R	R	Y
E	R	R	R	R	R	R	R	G	G	Y	R	R
F	R	R	R	R	R	R	R	G	G	Y	R	R
G	R	R	R	R	R	R	R	G	G	Y	R	R
H	R	R	R	R	R	R	R	G	G	Y	R	R
S-S	DW	DW	DW	DW	DW	DW	DW	W	FDW	DW	DW	DARK
T-T	DW	DW	DW	W	FDW	DW	DW	DW	DW	DW	DW	DARK

SIGNAL DISPLAY CHART

LOOP #	SIZE	# TURNS	MODE	DELAY	UNIT #	PHASE
L1	6' x 6'	3	PRESENCE	0	1	SYSTEM
L2	6' x 6'	3	PRESENCE	0	2	SYSTEM
L3	6'x12'x30	2-4-2	PRESENCE	8	3	4
L4	6' x 30'	2-4-2	PRESENCE	0	4	1
L5	6' x 6'	3	PRESENCE	0	5	SYSTEM
L6	6' x 6'	3	PRESENCE	0	6	SYSTEM
L7	6' x 6'	3	PRESENCE	0	7	SYSTEM
L8	6'x12'x30	2-4-2	PRESENCE	8	6	4
L9	8' x 30'	2-4-2	PRESENCE	0	7	4

LOOP DETECTOR CHART

ITEM	TOTAL	UNIT	DESCRIPTION
202	425	SQ FT	WALK REMOVED
608	425	SQ FT	4" CONCRETE WALK
625	6	EACH	GROUND ROD
625	7	EACH	PULLBOX, MISC AS PER PLAN
625	169	LIN FT	CONDUIT, 2", 713.04
625	10	LIN FT	CONDUIT, 3", 713.04
625	233	LIN FT	CONDUIT, JACKED OR DRILLED UNDER PAVEMENT, 3"
625	179	LIN FT	TRENCH
632	7	EACH	VEHICULAR SIGNAL HEAD, 3 SECT., 12" LENS, 1-WAY, AS PER PLAN
632	1	EACH	VEHICULAR SIGNAL HEAD, 5 SECT., 12" LENS, 1-WAY, AS PER PLAN
632	6	EACH	PEDESTRIAN SIGNAL HEAD, TYPE D2
632	6	EACH	PEDESTRIAN PUSHBUTTON
632	7	EACH	LOOP DETECTOR UNIT, AS PER PLAN
632	2	EACH	LOOP DETECTOR UNIT, DELAY AND EXTENSION TYPE, AS PER PLAN
632	8.86	CU YD	CONCRETE FOR ANCHOR BASE FOUNDATION
632	1	EACH	SIGNAL SUPPORT, TYPE TC-81.20, DES. 2, WITH 29' ARM
632	1	EACH	SIGNAL SUPPORT, TYPE TC-81.20, DES. 3, WITH 35' ARM
632	1	EACH	SIGNAL SUPPORT, TYPE TC-81.20, DES. 4, WITH 37' ARM
632	1	EACH	SIGNAL SUPPORT, TYPE TC-81.20, DES. 11, WITH 42' ARM
632	1	EACH	PEDESTAL, 8', TRANSFORMER BASE
632	4	EACH	CABLE SUPPORT ASSEMBLY
632	725	LIN FT	LOOP DETECTOR PAVEMENT CUTTING
632	983	LIN FT	SIGNAL CABLE, 7 CONDUCTOR, NO. 14 AWG
632	445	LIN FT	SIGNAL CABLE, 9 CONDUCTOR, NO. 14 AWG
632	1896	LIN FT	LOOP DETECTOR WIRE, TYPE E
632	1408	LIN FT	LOOP DETECTOR LEAD-IN CABLE
632	48	LIN FT	POWER CABLE, 3 CONDUCTOR, NO. 8 AWG
632	1	EACH	**CONDUIT RISER, 1 1/2"**
632	8	EACH	COVERING OF VEHICULAR SIGNAL HEAD
632	1	EACH	REMOVAL OF TRAFFIC SIGNAL INSTALLATION, AS PER PLAN
633	8.33	SQ FT	CONTROLLER WORK PAD
633	0.99	CU YD	CONCRETE FOR CABINET FOUNDATION
633	1	EACH	CONTROLLER, ACTUATED, 4 PHASE, SOLID STATE DIGITAL MICROPROCESSOR, AS PER PLAN

VINE STREET & BEN HUR AVE. TRAFFIC CONTROL PLAN