SIGNAL DIRECTION	SIGNAL HEAD	ϕ1 & ϕ5 R/W	ϕ1 & ϕ5 CLEAR			ϕ1 & ϕ6 R/W	ϕ1 & ϕ6 CLEAR			ϕ2 & ϕ5 R/W	ϕ2 & ϕ5 CLEAR			ϕ2 & ϕ6 R/W	ϕ2 & ϕ6 CLEAR			ϕ3 & ϕ7 R/W	ϕ3 & ϕ7 CLEAR			ϕ3 & ϕ8 R/W	ϕ3 & ϕ8 CLEAR			ϕ4 & ϕ7 R/W	ϕ4 & ϕ7 CLEAR			ϕ4 & ϕ8 R/W	ϕ4 & ϕ8 CLEAR			FLASH
NORTHBOUND	A	R	R	R	R	R	R	R	R	R	R	R	R	R	R	R	R	R/~~G~~	R/~~G~~	(e) R/~~Y~~	R(e)	G/~~G~~	G/~~G~~	(g) Y/~~Y~~	R(h)	R	R	R	R	G	G	Y	R	R
	B	R	R	R	R	R	R	R	R	R	R	R	R	R	R	R	R	R	R	R	R	G	G	(h) Y	R(h)	R	R	R	R	G	G	Y	R	R
EASTBOUND	C	R/~~G~~	R/~~G~~	(a) R/~~Y~~	R(a)	R	R	R	R	G/~~G~~	G/~~G~~	(c) Y/~~Y~~	R(d)	G	G	Y	R	R	R	R	R	R	R	R	R	R	R	R	R	R	R	R	R	Y
	D	R	R	R	R	R	R	R	R	G	G	(d) Y	R(d)	G	G	Y	R	R	R	R	R	R	R	R	R	R	R	R	R	R	R	R	R	Y
SOUTHBOUND	E	R	R	R	R	R	R	R	R	R	R	R	R	R	R	R	R	R/~~G~~	R/~~G~~	(f) R/~~Y~~	R(f)	R	R	R	R	G/~~G~~	G/~~G~~	(g) Y/~~Y~~	R(h)	G	G	Y	R	R
	F	R	R	R	R	R	R	R	R	R	R	R	R	R	R	R	R	R	R	R	R	R	R	R	R	G	G	(h) Y	R(h)	G	G	Y	R	R
WESTBOUND	G	R/~~G~~	R/~~G~~	(b) R/~~Y~~	R(b)	G/~~G~~	G/~~G~~	(c) Y/~~Y~~	R(d)	R	R	R	R	G	G	Y	R	R	R	R	R	R	R	R	R	R	R	R	R	R	R	R	R	Y
	H	R	R	R	R	G	G	(d) Y	R(d)	R	R	R	R	G	G	Y	R	R	R	R	R	R	R	R	R	R	R	R	R	R	R	R	R	Y

(a) R/~~G~~ IF ϕ2 & ϕ5 IS NEXT
(b) R/~~G~~ IF ϕ1 & ϕ6 IS NEXT
(c) G/~~Y~~ IF ϕ2 & ϕ6 IS NEXT
(d) G IF ϕ2 & ϕ6 IS NEXT
(e) R/~~G~~ IF ϕ3 & ϕ8 IS NEXT
(f) R/~~G~~ IF ϕ4 & ϕ7 IS NEXT
(g) G/~~Y~~ IF ϕ4 & ϕ8 IS NEXT
(h) G IF ϕ4 & ϕ8 IS NEXT

SIGNAL SEQUENCE CHART

LOOP	SIZE	TURNS	MODE	DELAY	PHASE	REMARK	INHIBITED DELAY	LOCATION 1st FRONT CORNER	LOCATION 2nd FRONT CORNER
L-1	6X25	3	PRESENCE	-	ϕ5	STANDARD	-	STA. 403+97, 3' LT	STA. 403+97, 3' RT
L-2	6X25	3	PRESENCE	-	ϕ1	STANDARD	-	STA. 406+52, 4' LT	STA. 406+52, 2' RT
L-3	6X25	3	PRESENCE	2.0	ϕ3	STANDARD	ϕ3	STA. 9+41, 3' RT	STA. 9+41, 3' LT
L-4	6X25	3	PRESENCE	8.0	ϕ8	STANDARD	ϕ8	STA. 9+55, 9' RT	STA. 9+55, 15' RT
L-5	6X25	3	PRESENCE	8.0	ϕ4	STANDARD	ϕ4	STA. 10+39, 9.5' LT	STA. 10+39, 15.5' LT
L-6	6X25	3	PRESENCE	2.0	ϕ7	STANDARD	ϕ7	STA. 10+54, 4' LT	STA. 10+54, 2' RT
S-1	6X6	3	PULSE	-	ϕ2	DIAMOND	-	STA. 401+57, 11' RT	-
S-2	6X6	3	PULSE	-	ϕ2	DIAMOND	-	STA. 401+57, 24' RT	-
S-3	6X6	3	PULSE	-	ϕ6	DIAMOND	-	STA. 408+98, 25' LT	-
S-4	6X6	3	PULSE	-	ϕ6	DIAMOND	-	STA. 408+98, 13' LT	-

LOOP DETECTOR CHART

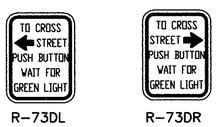

R-73DL R-73DR

PEDESTRIAN PUSHBUTTON SIGNS

- ALL CONDUIT SHALL BE 2" UNLESS NOTED OTHERWISE.
- POWER CABLE SHALL UTILIZE A SEPARATE 2" CONDUIT.

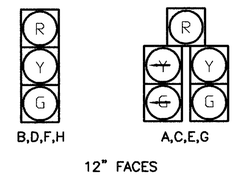

SIGNAL HEADS

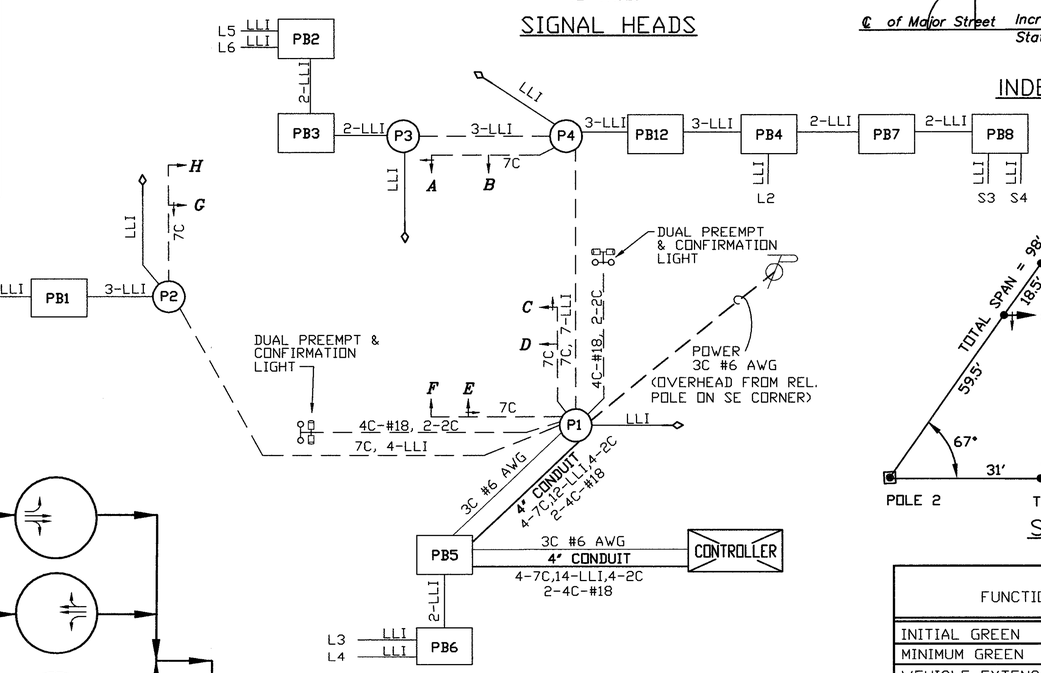

WIRING DIAGRAM

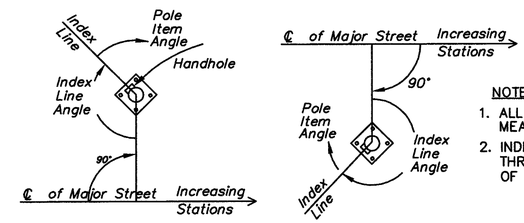

NOTES:
1. ALL ANGLES MEASURED CLOCKWISE.
2. INDEX LINE PASSES THROUGH CENTER OF HANDHOLE.

INDEX LINE ORIENTATION

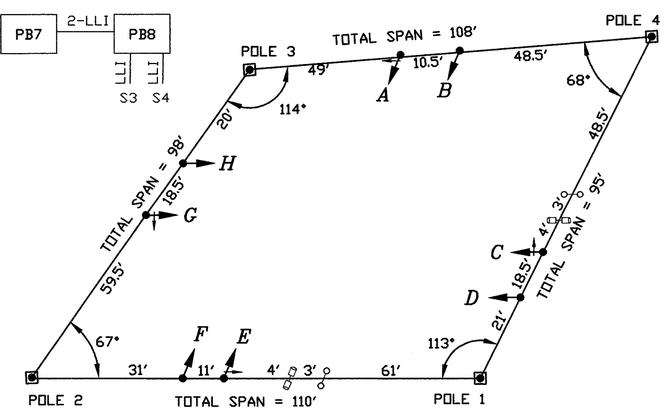

SPAN DIAGRAM

POLE NUMBER	STATION	OFFSET	DESIGN NUMBER	POLE HEIGHT (ft)	ATTACHMENT HEIGHT	INDEX LINE ANGLE (deg)	ANGLES (deg) FROM INDEX LINE: POWER SERVICE 1-1/2" BHC, 30" FROM BASE	PEDESTRIAN PUSH BUTTON	CONDUIT ELL SIZE & ANGLE	CABLE ENTRANCE, 2" BHC (12" FROM TOP)	2" CAPPED CONDUIT, ELL (FUTURE USE)
1	405+73	42.0' RT	6	30	24	90	0	0	2"-150 4"-150	180/270	–
2	404+64	50.5' RT	6	30	24	180	–	270	2"-118	180/270	0
3	404+95	42.0' LT	6	30	24	90	–	180	2"-145	180/270	315
4	406+03	48.5' LT	6	30	24	180	–	270	–	180/270	90

TYPE TC-81.10 STRAIN POLE SIGNAL SUPPORT

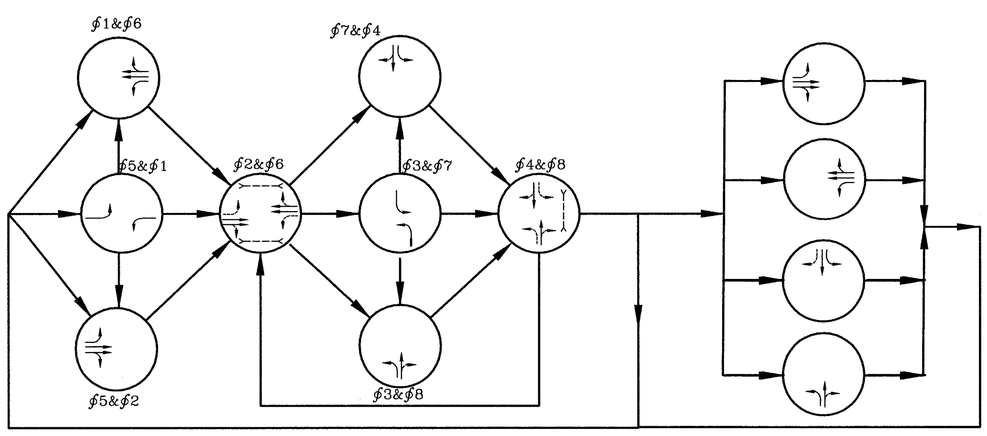

PHASING DIAGRAM

PRE-EMPT

FUNCTION	ϕ1	ϕ2	ϕ3	ϕ4	ϕ5	ϕ6	ϕ7	ϕ8
INITIAL GREEN	10.0	30.0	10.0	15.0	10.0	30.0	10.0	15.0
MINIMUM GREEN	–	–	–	–	–	–	–	–
VEHICLE EXTENSION	3.0	3.0	3.0	3.0	3.0	3.0	3.0	3.0
MAXIMUM GREEN	20.0	35.0	20.0	30.0	20.0	35.0	20.0	30.0
PEDESTRIAN WALK	–	7.0	–	–	–	7.0	–	7.0
PEDESTRIAN CLEARANCE	–	22.0	–	–	–	22.0	–	18.0
VEHICLE YELLOW CLEARANCE	5.0	5.0	4.5	4.5	5.0	5.0	4.5	4.5
VEHICLE ALL RED CLEARANCE	2.0	2.0	2.0	2.0	2.0	2.0	2.0	2.0
RECALL	OFF	MIN	OFF	OFF	OFF	MIN	OFF	OFF
MEMORY	N.L.	N.L.	N.L.	N.L.	N.L.	N.L.	N.L.	N.L.

NOTE: LTT = 2 MUST BE SET AT WAPITI KEYSTROKES A + 3 + A.

SIGNAL TIMING CHART

NOT TO SCALE

CALCULATED T.JF
CHECKED JMH

TRAFFIC SIGNAL PLAN
U.S. 20 / TOWNLINE ROAD

LAK - 20 - 18.72

333/441

DATE: 09-26-02 - H:\1998\98404\DWG\98404T08.DWG