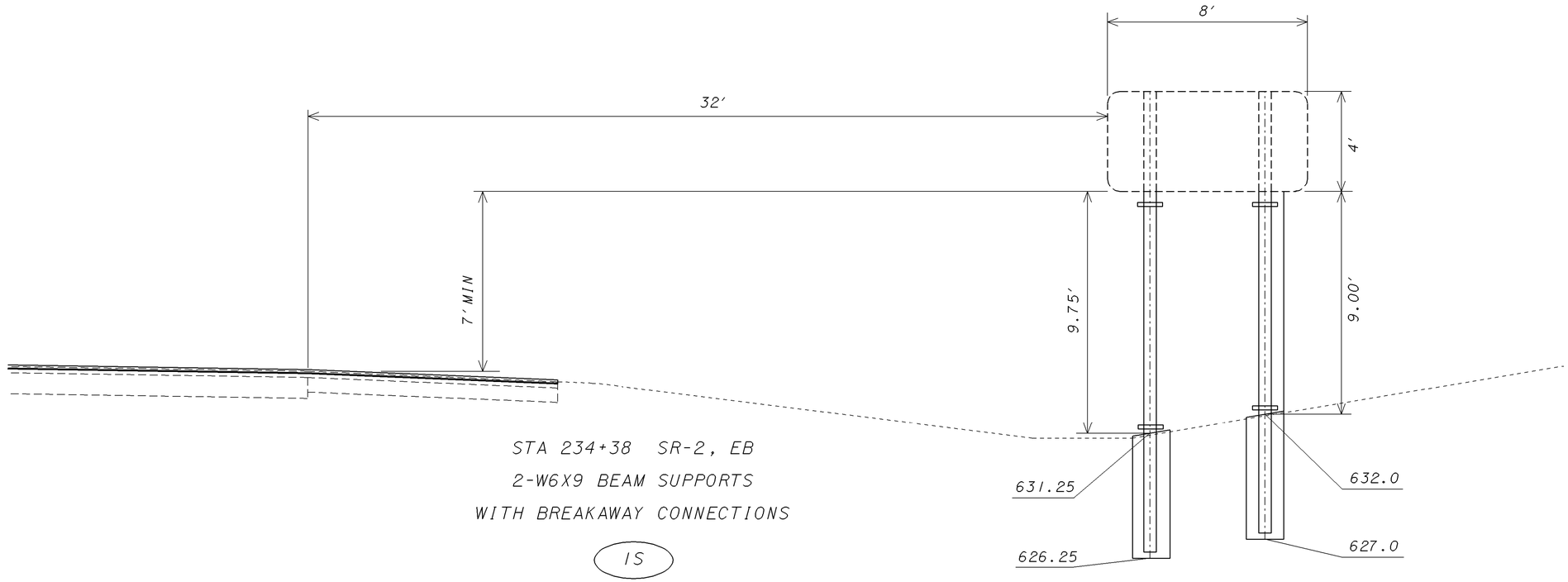

STA 234+38 SR-2, EB
2-W6X9 BEAM SUPPORTS
WITH BREAKAWAY CONNECTIONS

1S

* REFER TO SHEET 67 FOR LOCATION

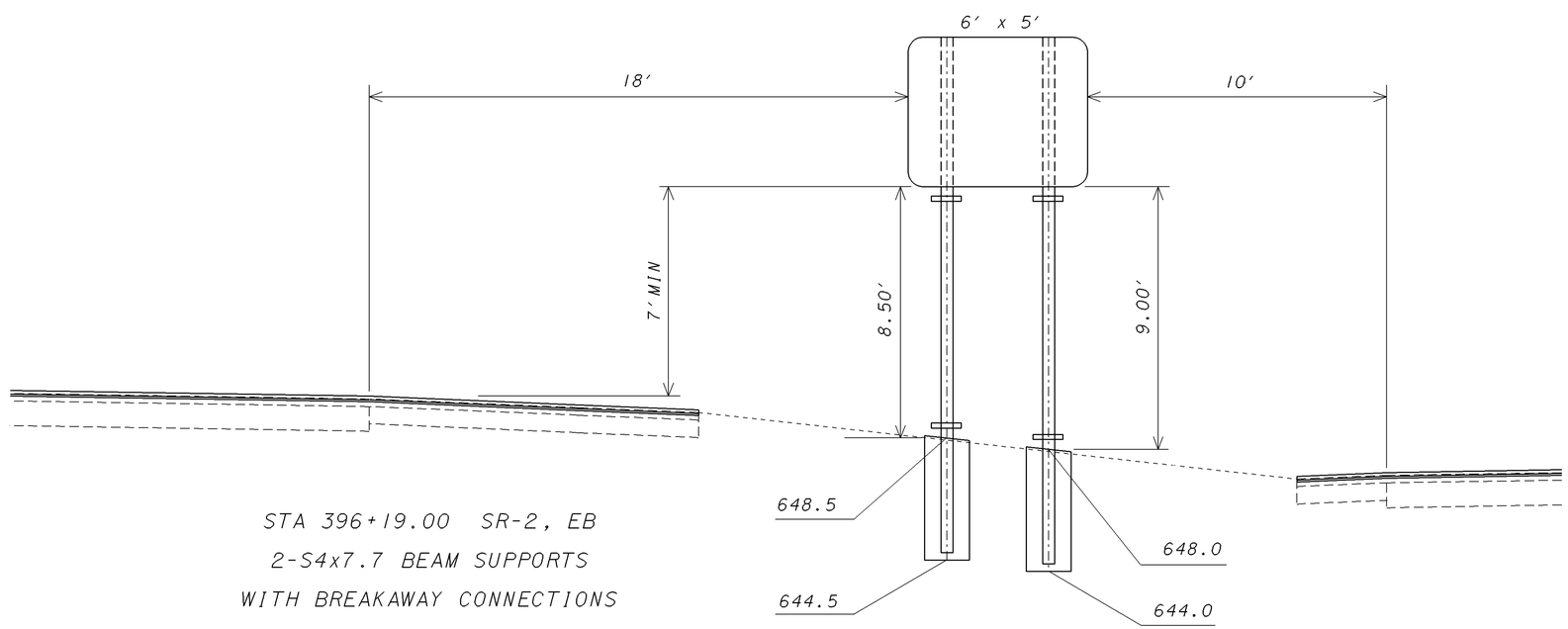

STA 396+19.00 SR-2, EB
2-S4x7.7 BEAM SUPPORTS
WITH BREAKAWAY CONNECTIONS

29S

* REFER TO SHEET 75 FOR LOCATION

CALCULATED GJN
CHECKED LDH

0 5 SCALE IN FEET

SIGN ELEVATION VIEWS

LAKE COUNTY
LAK-2-6.12

PLOTTED FROM: i:\PROJECTS\Pid19530\DGN\19530tea.dgn