MICROFILMED
JUL 9 1986

FED. RD. DIVISION	STATE	PROJECT	
2	OHIO		

349
384

LAKE COUNTY
SEC. LAK-2-14.22

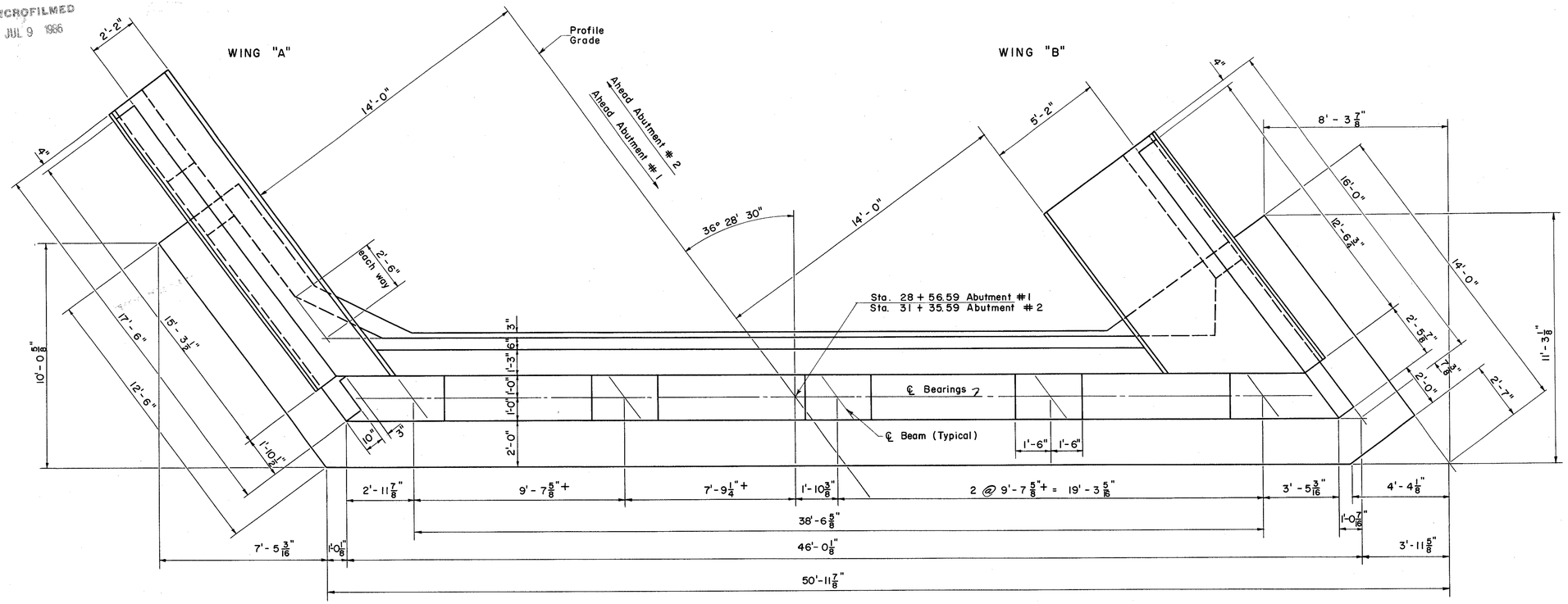

PLAN ABUTMENT # 1
(ABUTMENT # 2 SIMILAR BY 180° ROTATION ABOUT RDWY. ℄)

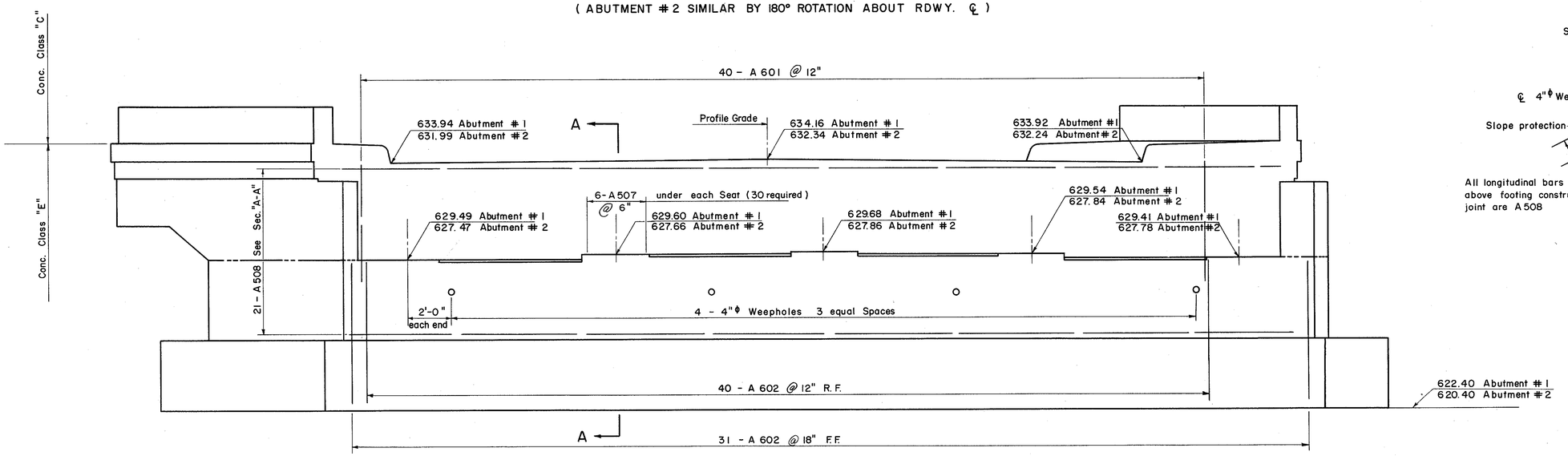

ELEVATION
(PILES ARE NOT SHOWN)

NOTES:

All reinforcing steel shall have 3" of cover in the footing and 2" elsewhere.

F.F. denotes Front Face
E.F. denotes Each Face
R.F. denotes Rear Face

All piles shall be 12-BP-53

For additional notes see "General Notes".

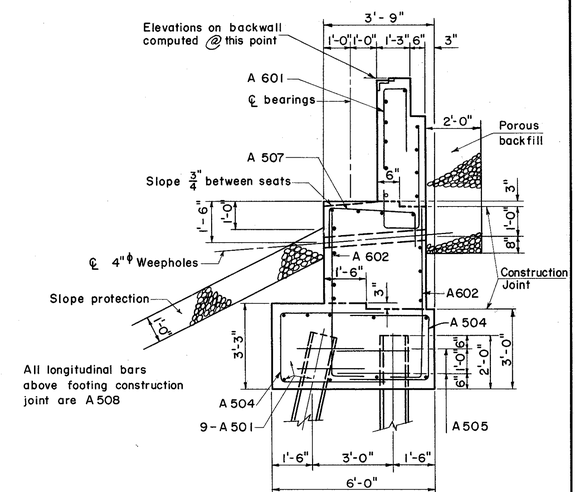

SECTION A-A

PREPARED BY
CAPITOL ENGINEERING ASSOCIATES, DILLSBURG, PA.
FOR

STATE OF OHIO
DEPARTMENT OF HIGHWAYS
DIVISION OF DESIGN AND CONSTRUCTION
BUREAU OF BRIDGES

ABUTMENTS 1 & 2
BRIDGE NO. LAK-2-1593
RELOC. S. R. 2 UNDER ELM STREET
LAKE COUNTY
STA. 741 + 03.27

DESIGNED	DRAWN	TRACED	CHECKED	REVIEWED DATE	REVISED
DRT	DRT	TJS 1-25-60	S.M.M. DRT RES		