FED. RD. DIVISION	STATE	PROJECT	
2	OHIO		

360
379

LAKE COUNTY
SEC. LAK-2-10.35

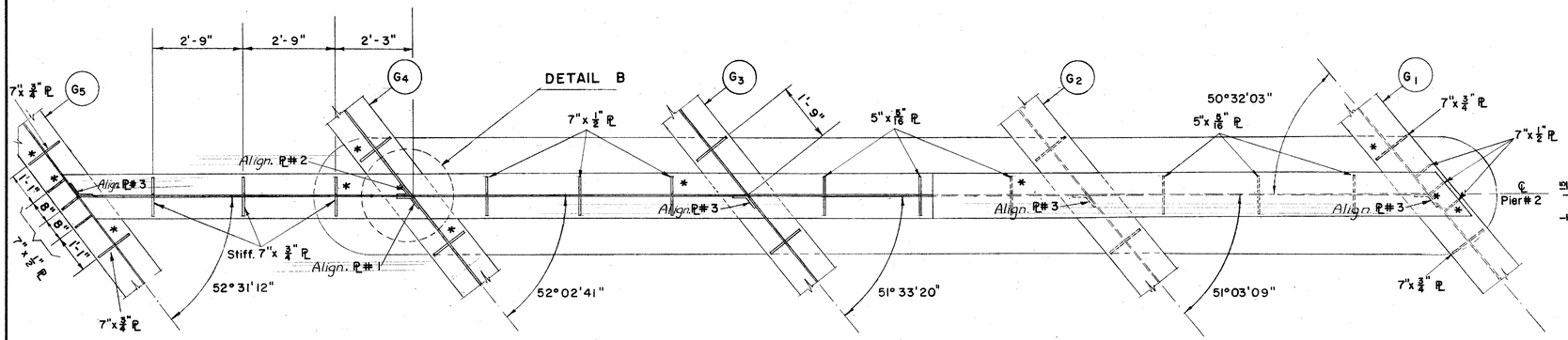

SECTION A-A AND TOP VIEW OF GIRDER ASSEMBLY @ PIER # 2

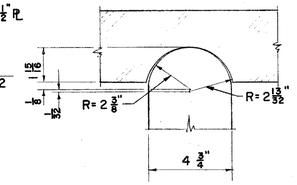

DETAIL A

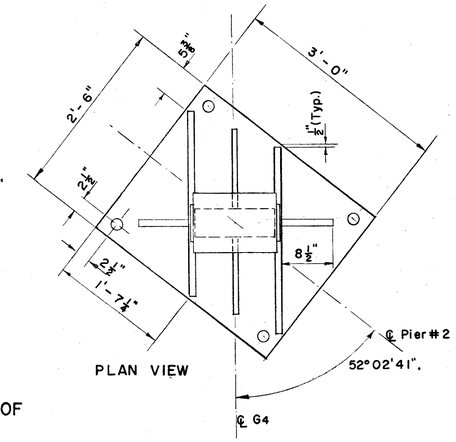

PLAN VIEW

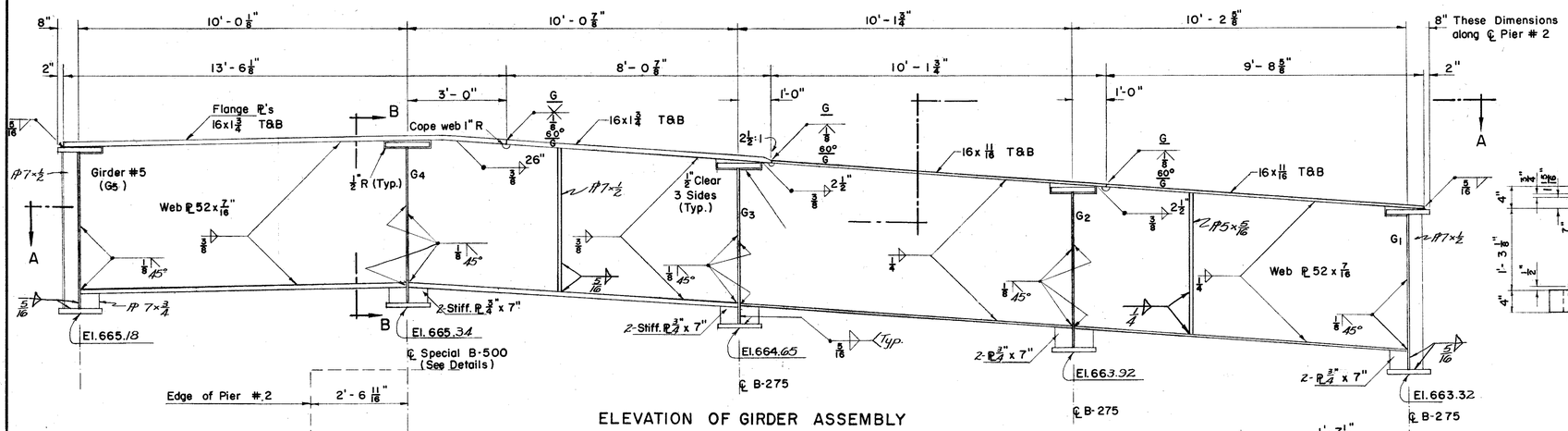

ELEVATION OF GIRDER ASSEMBLY
LOOKING AHEAD

SPECIAL DETAILS OF BOLSTER B-500

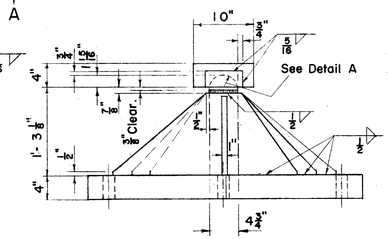

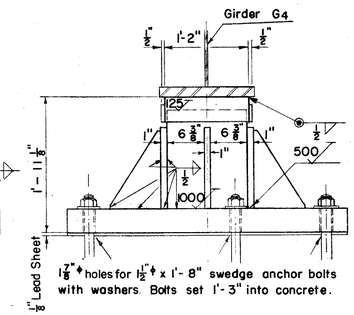

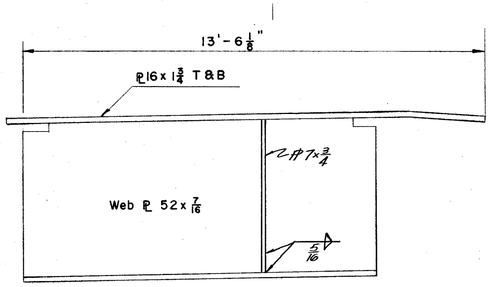

CANTILEVER SECTION
OF CROSS GIRDER
(SHOP FAB.)

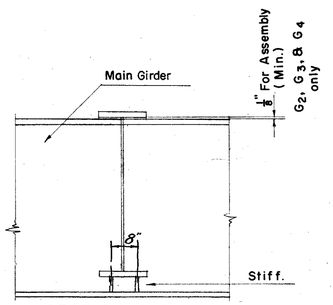

SECTION B-B

NOTE: Skew neglected in all elevations

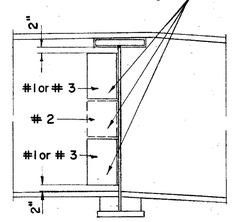

LOCATION OF ALIGNMENT
PLATES

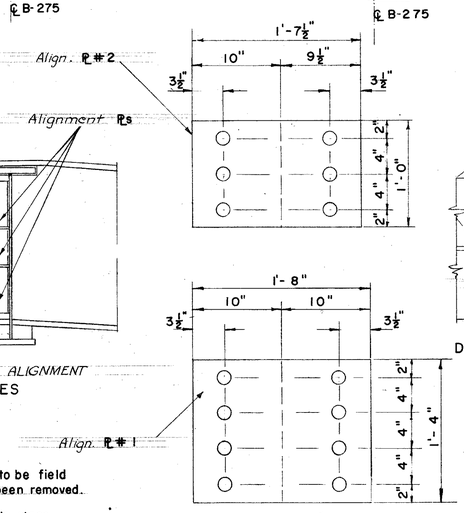

All Erection Bolts 1 1/4" ϕ high strength.
Bend- or assembly angle of Alignment plates as shown in Section A-A.

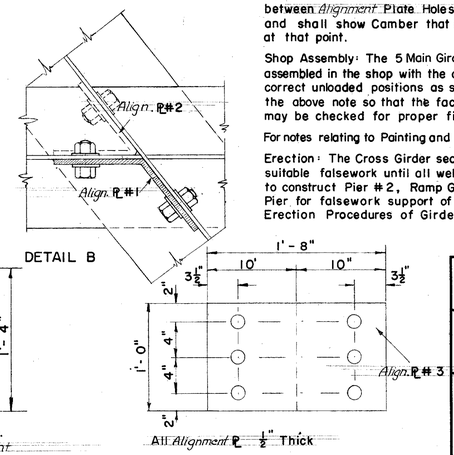

DETAIL B

All Alignment PL 1/2" Thick

NOTES:

Shop drawings for the Cross Girder shall include a layout with dimensions showing the relative unloaded vertical position of each Cross-Girder section with respect to the other sections and to the Main Girder sections as well as with respect to a Base or Work Line along Pier ℄#2 taking into account (camber and) the profile of Ramp E. This layout also shall show for Cross Girder Point G5 the deflection caused by clearance between Alignment Plate Holes and Erection Bolts, and D.L. deflection and shall show Camber that is required to maintain the specified Elevation at that point.

Shop Assembly: The 5 Main Girder sections at Pier #2, G1 to G5 shall be assembled in the shop with the corresponding Cross Girder sections in their correct unloaded positions as shown on the shop drawing layout required in the above note so that the faced joints for welding the sections together may be checked for proper fit.

For notes relating to Painting and Standard Bolster Details see Sheets # 359 & 361.

Erection: The Cross Girder section between G5 & G4 shall be supported by suitable falsework until all welding of the Cross Girder is completed. It is advisable to construct Pier #2, Ramp G, before framing Ramp E in order to utilize this Pier for falsework support of Cantilever Girder section. A drawing showing Erection Procedures of Girders shall be submitted with shop drawings.

After completing the Cross Girder Flange Welds, Cross Girder Alignment Plates shall be removed, the bolt holes welded shut and the field welding of the Girder Webs completed.

V-Groove butt welds at flange splices shall be finished smooth and flush with the base material on all surfaces.

All structural field welding shall be completed before superstructure concrete is placed.

Clip all Stiffeners to clear flange-web welds as required.

Stiffeners marked thus * are to be field welded after Alignment PL have been removed.

Cross frames shall be welded in place before cantilever falsework is removed.

MICROFILMED
JUL 1 1985

PREPARED BY
CAPITOL ENGINEERING ASSOCIATES, DILLSBURG, PA.
FOR

STATE OF OHIO
DEPARTMENT OF HIGHWAYS
DIVISION OF DESIGN AND CONSTRUCTION
BUREAU OF BRIDGES

CROSS GIRDER DETAILS
BRIDGE NO. LAK-2-1351
RELOC. SR.2 UNDER SR.44 RAMP E
LAKE COUNTY
STA. 613+25.24

DESIGNED	DRAWN	TRACED	CHECKED	REVISED	DATE	REVISED