FED.RD. DIVISION	STATE	PROJECT	
2	OHIO		

323
379

LAKE COUNTY
SEC. LAK-2-10.35

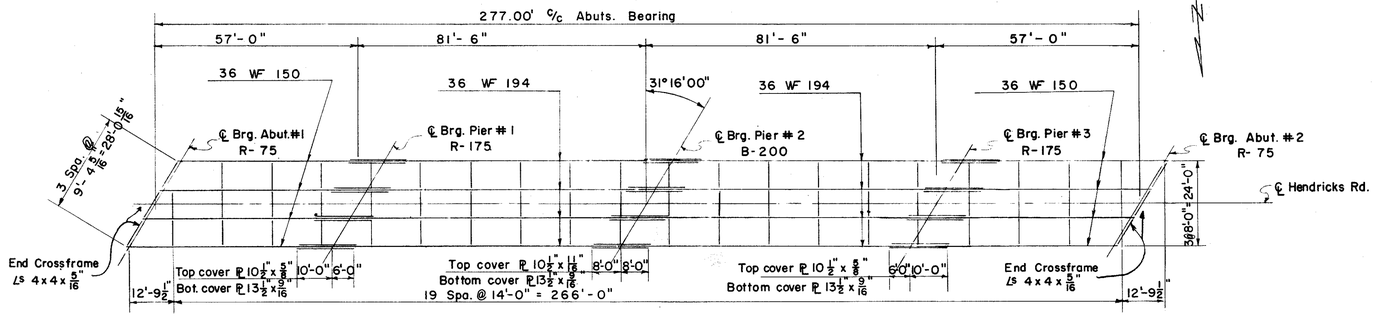

STEEL FRAMING PLAN

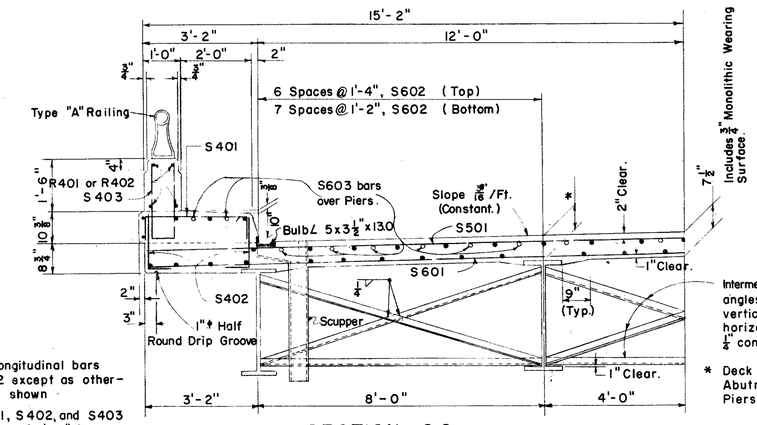

All longitudinal bars S602 except as otherwise shown

S401, S402, and S403 Spaced @ 1'-6" ℄/c

Intermediate Crossframes 3x3x5/16 angles. Weld both sides to vertical leg & top side of horizontal leg to beam with 1/4" continuous fillet weld.

* Deck Slab Depth @ Beams Abutments #1 & 2 = 8 1/8"
Piers 1, 2, & 3 = 7 1/2"

SECTION C-C

DEFLECTION AND CAMBER				
LOCATION	SPAN # 1	SPAN # 2	SPAN # 3	SPAN # 4
Deflection due to weight of steel.	1/8"	5/8"	5/8"	1/8"
Deflection due to remaining dead load.	1/4"	3/4"	3/4"	1/4"
Convexity required for vertical curve.	5/8"	1 1/4"	1 1/4"	5/8"
Sum of Deflection and convexity.	1"	2 5/8"	2 5/8"	1"
Required Camber	1"	2 5/8"	2 5/8"	1"

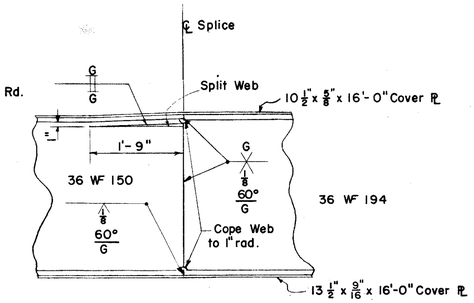

BEAM SPLICE DETAIL (AT PIER #1 & #3)

For Beam Splice Details @ Pier No. 2 see Std. Dwg. No. CSB-2-56 sheet 3 of 6 revised 2-2-59.

NOTES

PAINTING: After erection and after the shop coat has been cleaned and, where necessary, repainted in accordance with Sec. 8.04, an additional coat of the same paint as used in the shop shall be applied over the outside face of the outside steel beams and all sides of the bottom flange.

DECK SLAB DEPTH: * This is the nominal dimension. The quantity of deck concrete to be paid for shall be based on this dimension, even though deviation from it may be necessary because the top flange of the beam may not have the exact camber or conformation required to place it parallel to the finished grade.

BEAM SPLICE WELDING PROCEDURE:
1. Raise end of beam at Pier No. 2 2 1/4".
2. Butt-weld beam flanges and web at Pier No. 1 using the following sequence: make two passes on each flange, then two on the web; repeat, using one pass at each location, until welds are complete.
3. Weld top and bottom flange moment plates at Pier No. 1.
4. Lower end of beam at Pier No. 2.
5. Make splices at Piers No. 2 and 3 in the same manner, raising the ends of the beams at Pier No. 3 2 3/4" and 1" at Abutment No. 2.

CONCRETE shall be Class C.

CONCRETE and reinforcing steel above parapet construction joint included with railing for payment.

All Reinforcing Steel shall have 2" of cover from all faces except as otherwise shown.

CONCRETE DECK PLACING: In order to facilitate water curing of the concrete of the deck slab, the placing of concrete shall progress upgrade. The slab may be placed in sections, between transverse construction joints which are parallel to transverse reinforcing steel and are located near the center of any span.

REFERENCE shall be made to Standard Drawing CSB-2-56, sheets 2 & 3 of 6, revised 2-2-59 for details of end dams, gutters, scuppers, pipe drains, curb plates and end Crossframes.

REFERENCE shall be made to Standard Drawing RB-1-55 revised 2-2-59 for details of rockers and bolsters.

REFERENCE shall be made to Standard Drawing AR-1-57 revised 2-2-59 for details of aluminum railing Type "A" and concrete parapet details.

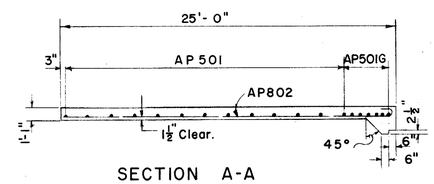

SECTION A-A

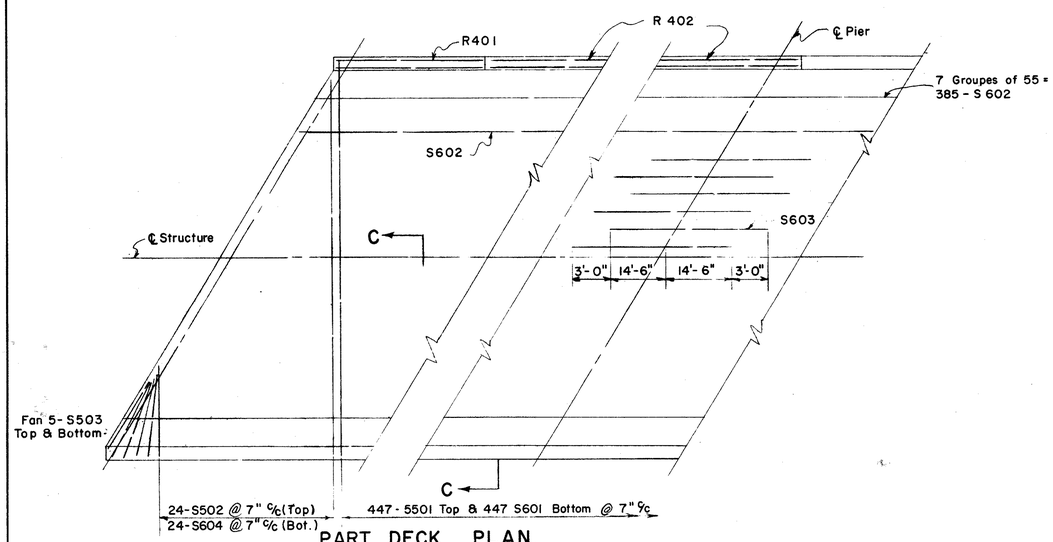

PART DECK PLAN

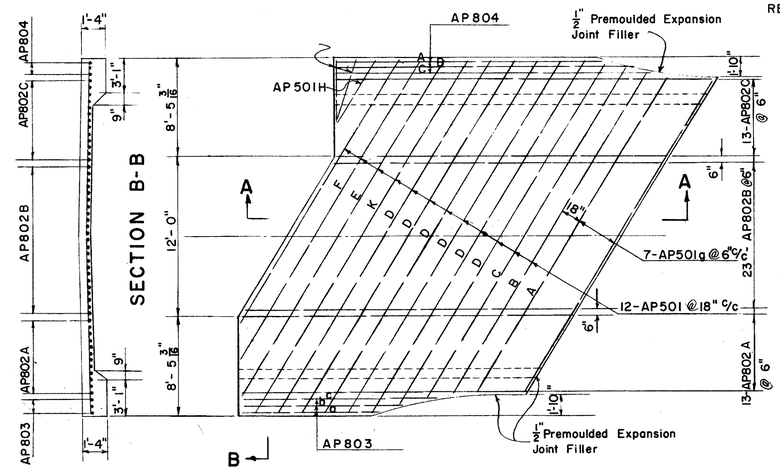

APPROACH SLAB

MICROFILMED
JUL 1 1986

SEC. L-33

PREPARED BY
CAPITOL ENGINEERING ASSOCIATES, DILLSBURG, PA
FOR

STATE OF OHIO
DEPARTMENT OF HIGHWAYS
DIVISION OF DESIGN AND CONSTRUCTION
BUREAU OF BRIDGES

SUPERSTRUCTURE AND APPROACH SLAB DETAILS
BRIDGE NO. LAK.-2-1140
SR. 2 UNDER HENDRICKS ROAD
LAKE COUNTY
STA. 499+91.55

DESIGNED	DRAWN	TRACED	CHECKED	REVISED DATE	REVISED
	J.T.H.				