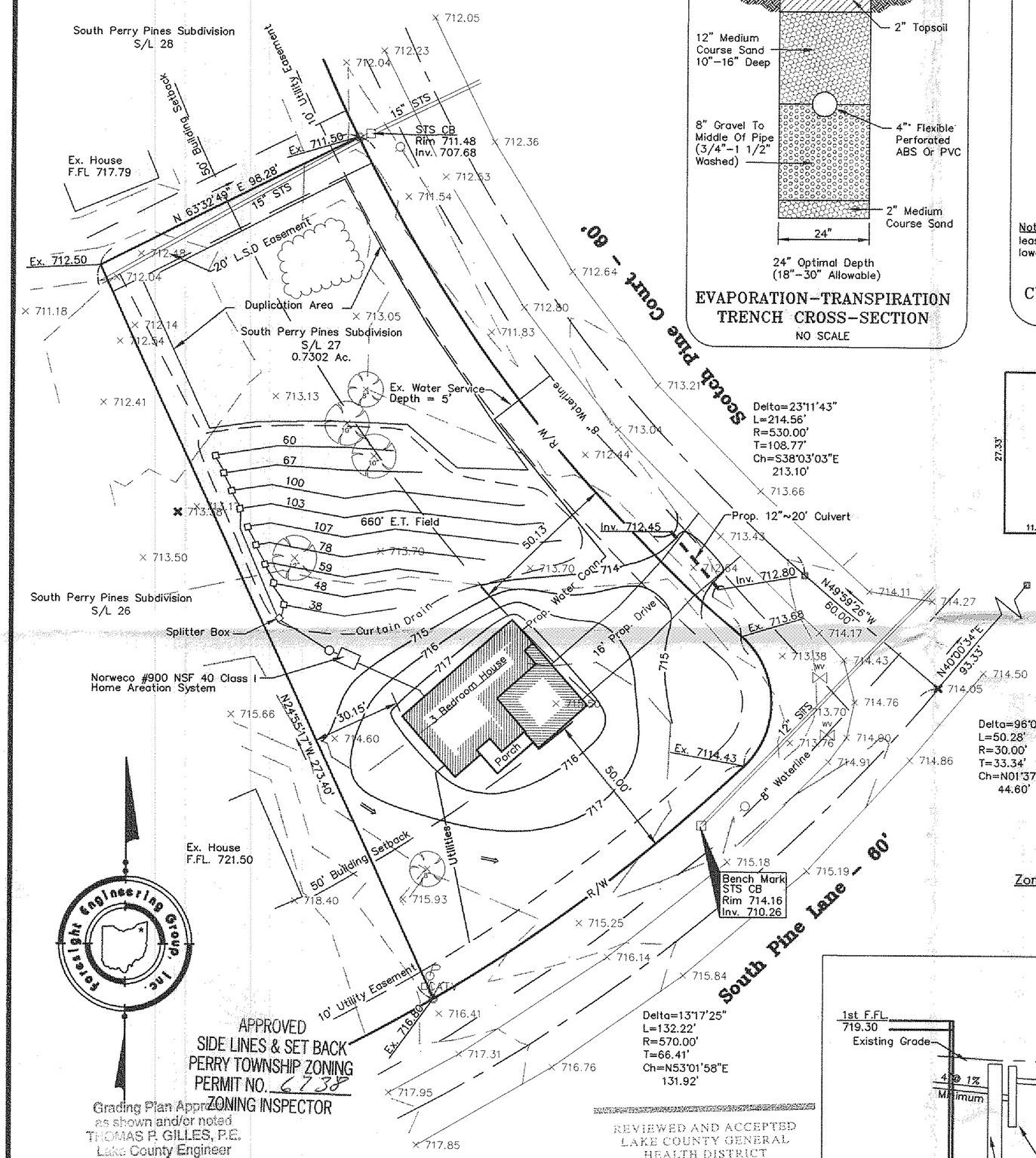

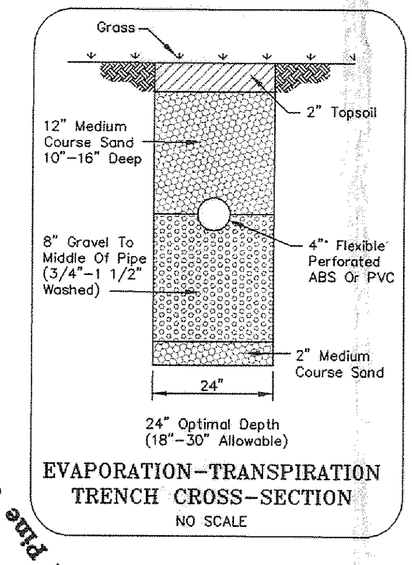

EVAPORATION-TRANSPIRATION TRENCH CROSS-SECTION

NO SCALE

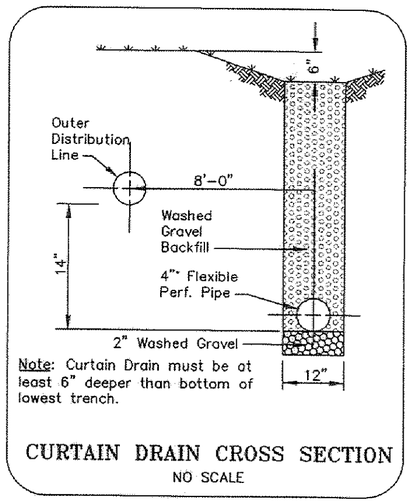

CURTAIN DRAIN CROSS SECTION

NO SCALE

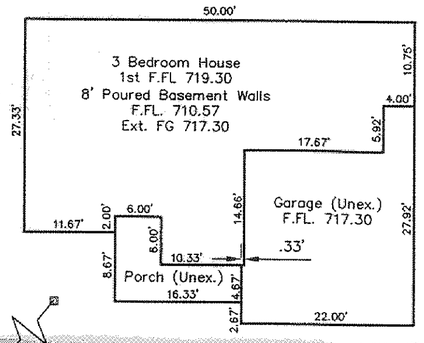

SYMBOL LEGEND	
	Iron Pin in Monument Found
	Iron Pin Found
	Catch Basin
	Fire Hydrant
WV	Water Valve
CATV	Cable TV Box
	Power Pole

Zoning Distric ~ ER-1
Front Setback 50'
Side Setback 15'
Rear Setback 15'

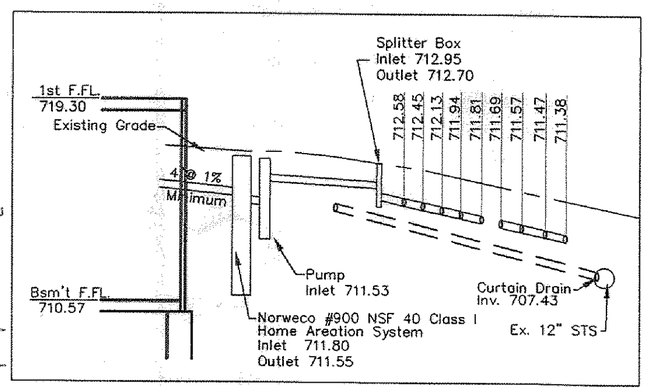

Hydraulic Profile

SITE PLAN

for : Mc Cullough Builders
CLIENT

P.O. Box 349 — ADDRESS
Perry — CITY
Ohio — STATE
44081 — ZIP

27 — SUBLOT No.
South Perry Pines — SUBDIVISION NAME
VOL. PAGE

LOT
TRACT
Perry — CITY
Ohio — STATE

Foresight Engineering Group

440 286-1010
440 286-1034 fax
320 Center Street, Unit F
Chardon, Ohio 44024

Engineers & Surveyors

DESIGN CERTIFICATION

This Site Plan was prepared by Foresight Engineering Group, Inc., and is correct to the best of my knowledge and belief.

NAME

CHECK LIST

LOT DIMENSIONS & BEARINGS
TIE TO NEAREST STREET
SUBLOT No. (PARCEL No.)
SURROUNDING OWNERS
BUILDING DIMENSIONS
SETBACK, SIDEYARD, REARYARD
FINISH GRADES
DRIVE & APRON TYPE, WIDTH, THICKNESS
SIDEWALK TYPE, WIDTH, THICKNESS
CULVERT TYPE, DIAM., LENGTH
WATER MAIN SIZE, LOCATION
SAN. SEWER SIZE, % GRADE, LOC.
SAN. MH. CAST. ELEV., INV. ELEV.
SAN. CONN. SIZE, % GRADE. LOC.
STROM SEWER SIZE, % GRADE. LOC.
STORM MH. CAST. ELEV., INV. ELEV.
PAV'T TYPE, GRADE, CURBS
GAS LINE LOC., SIZE
SEPTIC SYSTEM & DUPLICATION
WELL LOCATION & ISOLATION RADIUS

STATE OF OHIO
STEVEN N. ROESSNER
S-7070
REGISTERED PROFESSIONAL SURVEYOR

STATE SEAL

"AS BUILT" CERTIFICATION

I hereby certify that the circled information is existing as obtained on the site _____ 19___ and is correct to the best of my knowledge and belief.

NAME

SCALE : 1" = 30'	1	
FILE NAME: I:\Mcc19809\SL27.Dwg	2	
DATE : October 12, 1998	3	

BENCHMARK: Catch Basin Rim elev. = 714.16

"I, the undersigned hereby certify that this topography, indicated by 6", 1' or 2' contours, and the elevations shown hereon represent an actual field survey made by Foresight Engineering Group, Inc. on the 8 day of October 19 98 and that the elevations were taken at appropriate intervals and that as of that date they existed as indicated hereon."

NAME

2 WORKING DAYS BEFORE YOU DIG
CALL TOLL FREE 800-362-2764
OHIO UTILITIES PROTECTION SERVICE

EXISTING UNDERGROUND UTILITIES NOTES:
The location both horizontal and vertical of the underground utilities shown hereon, have been obtained by a diligent and comprehensive search of available records. Verification by field observation, has been conducted where practical. However, Foresight Engineering Group, Inc. does not guarantee the completeness nor accuracy thereof.

Foresight Engineering Group, Inc.

APPROVED
SIDE LINES & SET BACK
PERRY TOWNSHIP ZONING
PERMIT NO. 6738
ZONING INSPECTOR

Grading Plan Approved as shown and/or noted
THOMAS R. GILLES, P.E.
Lake County Engineer
By GJH Date 10-27-98

REVIEWED AND ACCEPTED
LAKE COUNTY GENERAL
HEALTH DISTRICT
Date 10-16-98 By

SEWAGE DISPOSAL PERMIT MUST BE OBTAINED BY A LAKE COUNTY LICENSED INSTALLER BEFORE INSTALLATION IS STARTED

GRAPHIC SCALE

30 0 15 30 60 120

(IN FEET)
1 inch = 30 ft.