EROSION CONTROL DETAILS

Foresight Engineering Group

440 286-1010
440 286-1034 fax
320 Center Street, Unit F
Chardon, Ohio 44024

Engineers & Surveyors

SCALE : NONE

Specifications
for
Curb Inlet Protection

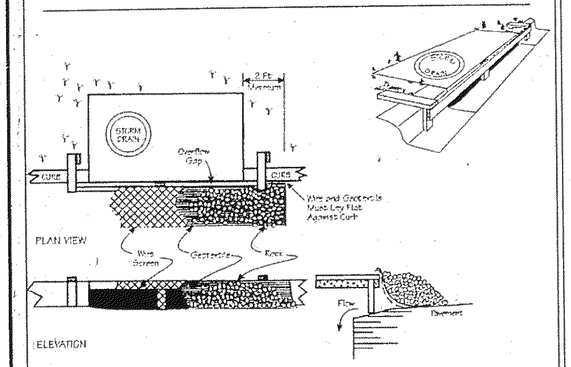

1 Inlet protection shall be constructed either before upslope land disturbance begins or before the storm drain becomes operational

2 The wooden frame is to be constructed of 2-by-4-in construction-grade lumber The end spacers shall be a minimum of 1 ft beyond both ends of the throat opening The anchors shall be nailed to 2-by-4-in stakes driven on the opposite side of the curb

3 The wire mesh shall be of sufficient strength to support fabric and stone It shall be a continuous piece with a minimum width of 30 in and 4 ft longer than the throat length of the inlet, 2 ft on each side

4 Geotextile cloth shall have an equivalent opening size (EOS) of 20-40 sieve and be resistant to sunlight It shall be at least the same size as the wire mesh

5 The wire mesh and geotextile cloth shall be formed to the concrete gutter and against the face of the curb on both sides of the inlet and securely fastened to the 2-by-4-in frame

6 Two-inch stone shall be placed over the wire mesh and geotextile in such a manner as to prevent water from entering the inlet under or around the geotextile cloth

Specifications
for
Inlet Protection in Swales, Ditch Lines or Yard Inlets

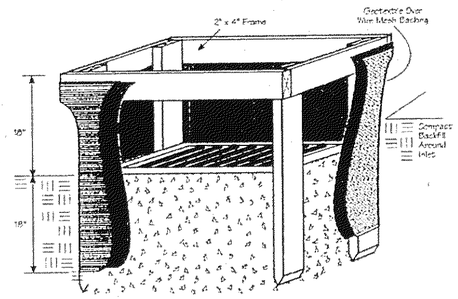

1 Inlet protection shall be constructed either before upslope land disturbance begins or before the storm drain becomes operational

2 The earth around the inlet shall be excavated completely to a depth at least 18 in

3 The wooden frame shall be constructed of 2-by-4-in construction-grade lumber The 2-by-4-in posts shall be driven 1 ft into the ground at four corners of the inlet and the top portion of 2-by-4-in frame assembled using the overlap joint shown The top of the frame shall be at least 6 in below adjacent roads if ponded water would pose a safety hazard to traffic

4 Wire mesh shall be of sufficient strength to support fabric with water fully impounded against it It shall be stretched tightly around the frame and fastened securely to the frame

5 Geotextile shall have an equivalent opening size of 20-40 sieve and be resistant to sunlight It shall be stretched tightly around the frame and fastened securely It shall extend from the top of the frame to 18 in below the inlet notch elevation The geotextile shall overlap across one side of the inlet so the ends of the cloth are not fastened to the same post

6 Backfill shall be placed around the inlet in compacted 6-in layers until the earth is even with notch elevation on ends and top elevation on sides

7 A compacted earth dike or a check dam shall be constructed in the ditch line below the inlet if the inlet is not in a depression and if runoff bypassing the inlet will not flow to a settling pond The top of earth dikes shall be at least 6 in higher than the top of the frame

Specifications
for
Construction Entrance

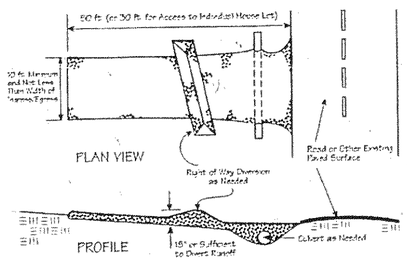

1 Stone Size--Two-inch stone shall be used, or recycled concrete equivalent

2 Length--The construction entrance shall be as long as required to stabilize high traffic areas but not less than 50 ft (except on single residence lot where a 30-ft minimum length applies)

3 Thickness--The stone layer shall be at least 6 in thick

4 Width--The entrance shall be at least 10 ft wide, but not less than the full width at points where ingress or egress occurs

5 Bedding--A geotextile shall be placed over the entire area prior to placing stone It shall have a Grab Tensile Strength of at least 200 lb and a Mullen Burst Strength of at least 190 lb

6 Culvert--A pipe or culvert shall be constructed under the entrance if needed to prevent surface water flowing across the entrance from being directed out onto paved surfaces

7 Water Bar--A water bar shall be constructed as part of the construction entrance if needed to prevent surface runoff from flowing the length of the construction entrance and out onto paved surfaces

8 Maintenance--Top dressing of additional stone shall be applied as conditions demand Mud spilled, dropped, washed or tracked onto public roads, or any surface where runoff is not checked by sediment controls, shall be removed immediately Removal shall be accomplished by scraping or sweeping

9 Construction entrances shall not be relied upon to remove mud from vehicles and prevent off-site tracking Vehicles that enter and leave the construction-site shall be restricted from muddy areas

Specifications
for
Silt Fence

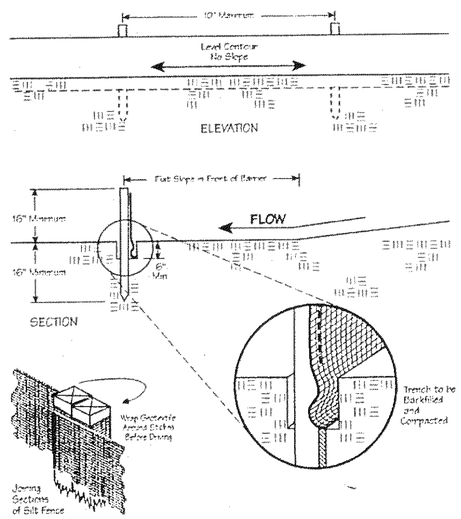

Specifications
for
Permanent Seeding

SITE PREPARATION

1 A subsoiler, plow or other implement shall be used to reduce soil compaction and allow maximum infiltration (Maximizing infiltration will help control both runoff rate and water quality) Subsoiling should be done when the soil moisture is low enough to allow the soil to crack or fracture Subsoiling shall not be done on slip-prone areas where soil preparation should be limited to what is necessary for establishing vegetation

2 The site shall be graded as needed to permit the use of conventional equipment for seedbed preparation and seeding

3 Resoil shall be applied where needed to establish vegetation

SEEDBED PREPARATION

1 Lime--Agricultural ground limestone shall be applied to acid soil as recommended by a soil test In lieu of a soil test, lime shall be applied at the rate of 100 lb /1,000 sq ft or 2 tons/ac

2 Fertilizer--Fertilizer shall be applied as recommended by a soil test In lieu of a soil test, fertilizer shall be applied at a rate of 12 lb /1,000 sq ft or 500 lb /ac of 10-10-10 or 12-12-12 analysis

3 The lime and fertilizer shall be worked into the soil with a disk harrow, spring-tooth harrow, or other suitable field implement to a depth of 3 in On sloping land the soil shall be worked on the contour

SEEDING DATES AND SOIL CONDITIONS

Seeding should be done March 1 to May 31 or Aug 1 to September 30 These seeding dates are ideal but, with the use of additional mulch and irrigation, seedings may be made any time throughout the growing season ← Tillage/seedbed preparation should be done when the soil is dry enough to crumble and not form ribbons when compressed by hand For winter seeding, see the following section on dormant seeding

DORMANT SEEDINGS

1 Seedings shall not be planted from October 1 through November 20 During this period the seeds are likely to germinate but probably will not be able to survive the winter

The following methods may be used for "Dormant Seeding"

- From October 1 through November 20, prepare the seedbed, add the required amounts of lime and fertilizer, then mulch and anchor After November 20, and before March 15, broadcast the selected seed mixture Increase the seeding rates by 50% for this type of seeding
- From November 20 through March 15, when soil conditions permit, prepare the seedbed, lime and fertilize, apply the selected seed mixture, mulch and anchor Increase the seeding rates by 50% for this type of seeding
- Apply seed uniformly with a cyclone seeder, drill, cultipacker seeder, or hydro-seeder (slurry may include seed and fertilizer) on a firm, moist seedbed
- Where feasible, except when a cultipacker type seeder is used, the seedbed should be firmed following seeding operations with a cultipacker, roller, or light drag On sloping land, seeding operations should be on the contour where feasible

MULCHING

1 Mulch material shall be applied immediately after seeding Seedings made during optimum seeding dates and with favorable soil conditions and on very flat areas may not need mulch to achieve adequate stabilization Dormant seeding shall be mulched

2 Materials

- Straw--If straw is used it shall be unrotted small-grain straw applied at the rate of 2 tons/ac or 90 lb /1,000 sq ft (two to three bales) The mulch shall be spread uniformly by hand or mechanically so the soil surface is covered For uniform distribution of hand-spread mulch, divide area into approximately 1,000-sq -ft sections and spread two 45-lb bales of straw in each section
- Hydroseeders--If wood cellulose fiber is used, it shall be used at 2,000 lb /ac or 46 lb /1,000 sq ft
- Other--Other acceptable mulches include mulch mattings applied according to manufacturer's recommendations or wood chips applied at 6 tons/ac

3 Straw Mulch Anchoring Methods

Straw mulch shall be anchored immediately to minimize loss by wind or water

- Mechanical--A disk, crimper, or similar type tool shall be set straight to punch or anchor the mulch material into the soil Straw mechanically anchored shall not be finely chopped but, generally, be left longer than 6 in
- Mulch Nettings--Nettings shall be used according to the manufacturer's recommendations Netting may be necessary to hold mulch in place in areas of concentrated runoff and on critical slopes
- Asphalt Emulsion--Asphalt shall be applied as recommended by the manufacturer or at the rate of 160 gal /ac
- Synthetic Binders--Synthetic binders such as Acrylic DLR (Agri-Tac), DCA-70, Petroset, Terra Tack or equal may be used at rates recommended by the manufacturer
- Wood Cellulose Fiber--Wood cellulose fiber binder shall be applied at a net dry weight of 750 lb /ac The wood cellulose fiber shall be mixed with water and the mixture shall contain a maximum of 50 lb /100 gal of wood cellulose fiber

IRRIGATION

1 Permanent seeding shall include irrigation to establish vegetation during dry or hot weather or on adverse site conditions as needed for adequate moisture for seed germination and plant growth

2 Excessive irrigation rates shall be avoided and irrigation monitored to prevent erosion and damage from runoff

Permanent Seeding			
Seed Mix	Seeding Rate		Notes
	lb /ac	lb /1,000ft ^{2}	
General Use			
Creeping Red Fescue Domestic Ryegrass Kentucky Bluegrass	20-40 10-20 10-20	½-1 ¼-½ ¼-½	
Tall Fescue	40	1	
Dwarf Fescue	40	1	
Steep Banks or Cut Slopes			
Tall Fescue	40	1	
Crown Vetch Tall Fescue	10 20	¼ ½	Do not seed later than August
Flat Pea Tall Fescue	20 20	½ ½	Do not seed later than August
Road Ditches and Swales			
Tall Fescue	40	1	
Dwarf Fescue Kentucky Bluegrass	90 5	2⅛	
Lawns			
Kentucky Bluegrass Perennial Ryegrass	60 60	1½ 1½	
Kentucky Bluegrass Creeping Red Fescue	60 60	1½ 1½	For shaded areas

Note Other approved seed species may be substituted

Specifications
for
Small Lot Building Sites

1 Preexisting vegetation shall be retained on idle portions of the building lot for as long as construction operations allow Clearing shall be done so only active working areas are bare

2 Temporary seed (annual rye, oats, etc) and/or mulch shall be applied to areas, such as stockpiles, that are bare and not actively being worked This shall apply to areas that will not be reworked for 14 days or more

3 Stockpiles excavated from basements shall be situated away from streets, swales, or other waterways and shall be seeded and/or mulched

4 Silt fence shall control sheet flow runoff from the building lot It shall not be constructed in channels or areas of concentrated flow Other sediment controls such as inlet protection and sediment traps shall also be used as needed to control sediment runoff

5 Construction vehicle access shall be limited to one route, to the greatest extent practical The access shall be gravel or crushed rock applied to the driveway area

6 Mud tracked onto the street or sediment settled around curb inlet protection shall be removed daily or as needed to prevent it from accumulating It shall be removed by shovelling and scraping and shall NOT be washed off paved surfaces or into storm drains

Specifications
for
Temporary Seeding

Temporary Seeding Species Selection			
Seeding Dates	Species	Lb /1,000 ft ^{2}	Per Ac
March 1 to August 15	Oats Tall Fescue Annual Ryegrass	3 1 1	4 bushel 40 lb 40 lb
	Perennial Ryegrass Tall Fescue Annual Ryegrass	1 1 1	40 lb 40 lb 40 lb
August 16 to November 1	Rye Tall Fescue Annual Ryegrass	3 1 1	2 bushel 40 lb 40 lb
	Wheat Tall Fescue Annual Ryegrass	3 1 1	2 bushel 40 lb 40 lb
	Perennial Ryegrass Tall Fescue Annual Ryegrass	1 1 1	40 lb 40 lb 40 lb
November 1 to Spring Seeding	Use mulch only, sodding practices or dormant seeding		

Note Other approved seed species may be substituted

1 Structural erosion- and sediment-control practices such as diversions and sediment traps shall be installed and stabilized with temporary seeding prior to grading the rest of the construction-site

2 Temporary seed shall be applied between construction operations on soil that will not be graded or reworked for 45 days or more These idle areas should be seeded as soon as possible after grading or shall be seeded within 7 days Several applications of temporary seeding are necessary on typical construction projects

3 The seedbed should be pulverized and loose to ensure the success of establishing vegetation However, temporary seeding shall not be postponed if ideal seedbed preparation is not possible

4 Soil Amendments--Applications of temporary vegetation shall establish adequate stands of vegetation which may require the use of soil amendments Soil tests should be taken on the site to predict the need for lime and fertilizer

5 Seeding Method--Seed shall be applied uniformly with a cyclone seeder, drill, cultipacker seeder, or hydroseeder When feasible, seed that has been broadcast shall be covered by raking or dragging and then lightly tamped into place using a roller or cultipacker If hydroseeding is used, the seed and fertilizer will be mixed on-site and the seeding shall be done immediately and without interruption

MULCHING TEMPORARY SEEDING

1 Applications of temporary seeding shall include mulch which shall be applied during or immediately after seeding Seedings made during optimum seeding dates and with favorable soil conditions and on very flat areas may not need mulch to achieve adequate stabilization

2 Materials

- Straw--If straw is used, it shall be unrotted small-grain straw applied at the rate of 2 tons/ac or 90 lb /1,000 sq ft (two to three bales) The mulch shall be spread uniformly by hand or mechanically so the soil surface is covered For uniform distribution of hand-spread mulch, divide area into approximately 1,000-sq -ft sections and spread two 45-lb bales of straw in each section
- Hydroseeders--If wood cellulose fiber is used, it shall be used at 2,000 lb /ac or 46 lb /1,000 sq ft
- Other--Other acceptable mulches include mulch, mattings applied according to manufacturer's recommendations or wood chips applied at 6 tons/ac

3 Straw mulch shall be anchored immediately to minimize loss by wind or water Anchoring Methods

- Mechanical--A disk, crimper, or similar type tool shall be set straight to punch or anchor the mulch material into the soil Straw mechanically anchored shall not be finely chopped but, generally, be left longer than 6 in
- Mulch Nettings--Nettings shall be used according to the manufacturer's recommendations Netting may be necessary to hold mulch in place in areas of concentration runoff and on critical slopes
- Asphalt Emulsion--Asphalt shall be applied as recommended by the manufacturer or at the rate of 160 gal /ac
- Synthetic Binders--Synthetic binders such as Acrylic DLR (Agri-Tac), DCA-70, Petroset, Terra Tack or equal may be used at rates recommended by the manufacturer
- Wood-Cellulose Fiber--Wood-cellulose fiber binder shall be applied at a net dry weight of 750 lb /ac The wood-cellulose fiber shall be mixed with water and the mixture shall contain a maximum of 50 lb /100 gal

I:\Lib\CAC\3011Water.dwg Wed May 10 10:44:55 2000 Copyright Foresight Engineering Group, Inc.