SITE PLAN

PAINESVILLE TOWNSHIP, LAKE COUNTY, OHIO

for: MALKAMAKI HOMES
CLIENT OWNER

ADDRESS STREET CITY ZIP

HEATHERSTONE
SUBDIVISION NAME LOT TRACT

77 VOL.—PG. BOWDOIN CRT. VOLUME PAGE
SUBLOT NO. STREET PERM. PARCEL NO. STREET

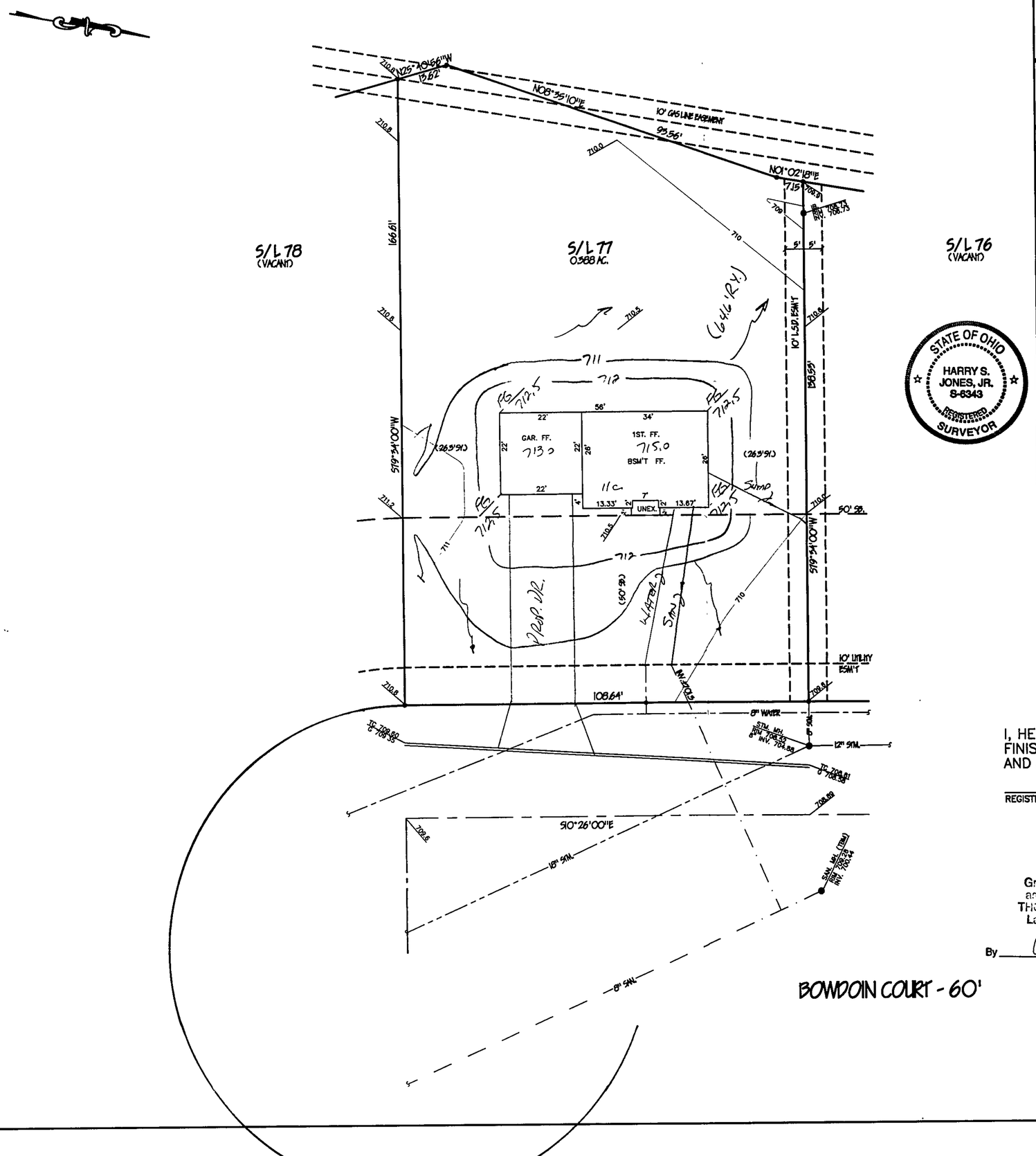

LEGEND

SANITARY MANHOLE
STORM MANHOLE
INLET OR CATCH BASIN
HYDRANT
EXISTING CONTOURS
PROPOSED CONTOURS

EXIST. ELEV. 100.0 / 100.0 PROP. ELEV.

AS BUILT ELEVATION

INDICATES DIRECTION OF SURFACE DRAINAGE

REMARKS

ALL BOUNDARY DATA SHOWN WAS OBTAINED FROM (DEEDS, RECORDED SUBDIVISION PLAT OR OTHER PUBLIC RECORDS).

LOCATIONS AS SHOWN OF ADJACENT WELLS AND SEPTIC TANKS OBTAINED FROM LAKE COUNTY HEALTH DEPARTMENT

STATE OF OHIO
HARRY S. JONES, JR.
S-6343
REGISTERED SURVEYOR

DESIGN CERTIFICATION

THIS PLAT WAS PREPARED BY ME, AND IS CORRECT TO THE BEST OF MY KNOWLEDGE AND BELIEF.

NAME SURVEYOR REGISTRATION NO.

CHECK LIST

NO. OF BEDROOMS
DIMENSIONS
BEARINGS
TIE TO NEAREST STREET
SUBLOT NO. PARCEL NO.
SURROUNDING OWNERS
BLDG. DIMENSIONS FIN GR.
BLDG. TIES FL'R. GRADES
APRON TYPE WIDTH THICKNESS
SIDEWALK TYPE WIDTH THICKNESS
CULVERT TYPE DIA., LENGTH
ROCK OUTCROPPINGS

WATER MAIN SIZE, LOCATION
SAN. SEWER SIZE % GR. LOC.
SAN. MH. CAST. ELEV. INV. ELEV.
SAN. CONN. SIZE, LOC. DEPTH
STORM SEWER SIZE % GR. LOC.
STORM MH. CAST ELEV. INV. ELEV.
PAV'T TYPE GRADE CURBS
GAS LINE LOC. SIZE PRESSURE
SEPTIC TANK LOCATION & DUPLICATION AREA
WELL LOCATION
ISOLATION RADIUS FROM WELL

REVISIONS		
NO.	DATE	BY
1		
2		
3		
4		
5		

PLAN PREPARED BY:
BABCOCK · JONES & ASSOCIATES, INC.
PAINESVILLE, OHIO

DRAWN BY T.R.	SCALE 1" = 20'	PHONE NO. 216-357-1811	
CHK'D. H.J.	DATE 1/18/98	DRAWING NO. 97-167-77	
CREW CHIEF W.B.	APP'D H.J.		

"AS BUILT" CERTIFICATION

I, HEREBY CERTIFY THAT THE CIRCLED GRADES ARE EXISTING FINISH GRADES CHECKED IN THE FIELD ON _____, 19___ AND ARE CORRECT TO THE BEST OF MY KNOWLEDGE AND BELIEF.

REGISTERED SURVEYOR REG. NO.

TBM-SAN. MH S/L 84
RIM ELEV. 709.28

Grading Plan Approved
as shown and/or noted
THOMAS P. GILLES, P.E.
Lake County Engineer

By GJH Date 4-7-98

APPROVED
PAINESVILLE TOWNSHIP
ZONING DEPARTMENT
1998073
4/2/98 DJRost