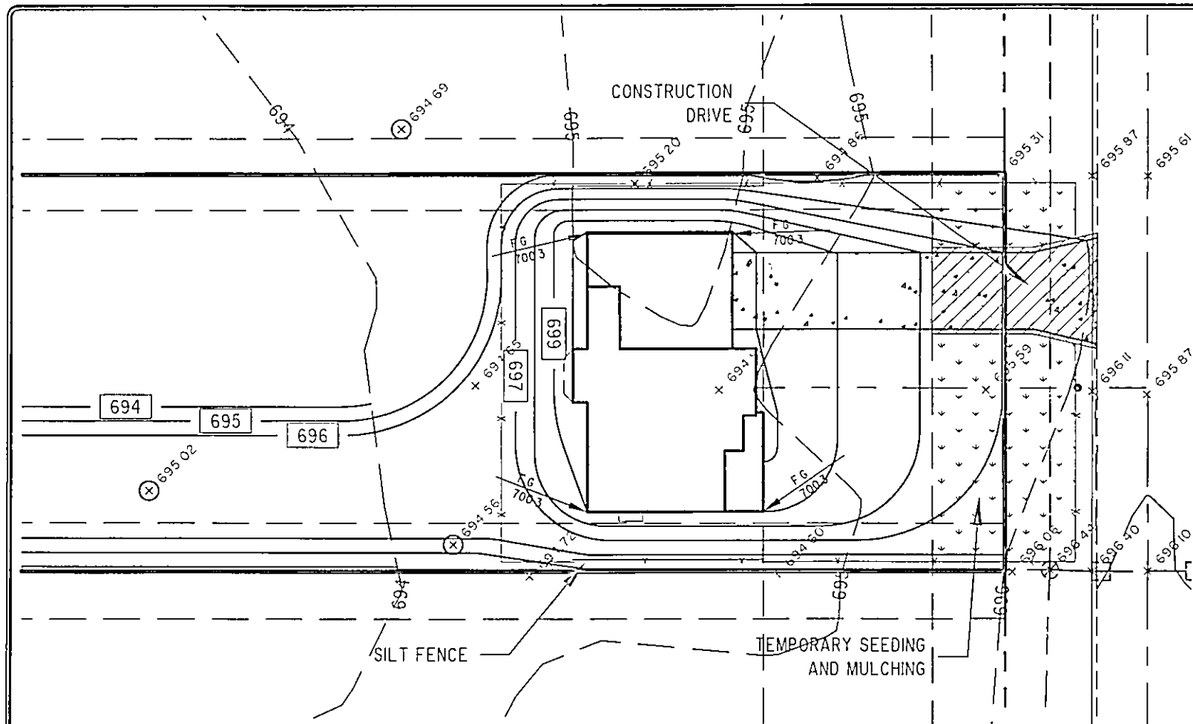

TEMPORARY SEEDING SPECIFICATIONS			
SEEDING DATES	SPECIES	LB /1000 FT.	PER AC.
MARCH 1 TO AUGUST 15	OATS	3	4 BUSHEL
	TALL FESCUE	1	40 LB.
	ANNUAL RYEGRASS	1	40 LB.
	PERENNIAL RYEGRASS	1	40 LB.
	TALL FESCUE	1	40 LB
	ANNUAL RYEGRASS	1	40 LB.
AUGUST 16 TO NOVEMBER 1	RYE	3	2 BUSHEL
	TALL FESCUE	1	40 LB.
	ANNUAL RYEGRASS	1	40 LB.
	WHEAT	3	2 BUSHEL
	TALL FESCUE	1	40 LB.
	ANNUAL RYEGRASS	1	40 LB.
	PERENNIAL RYEGRASS	1	40 LB
	TALL FESCUE	1	40 LB
	ANNUAL RYEGRASS	1	40 LB
NOVEMBER 1 TO SPRING SEEDING	USE MULCH ONLY, SODDING PRACTICES OR DORMANT SEEDING.		

NOTE: OTHER APPROVED SEED SPECIES MAY BE SUBSITUTED.

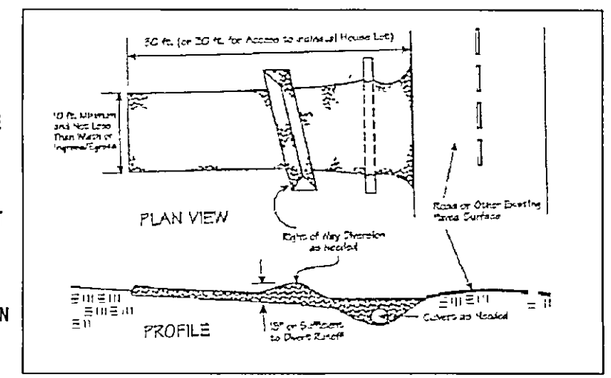

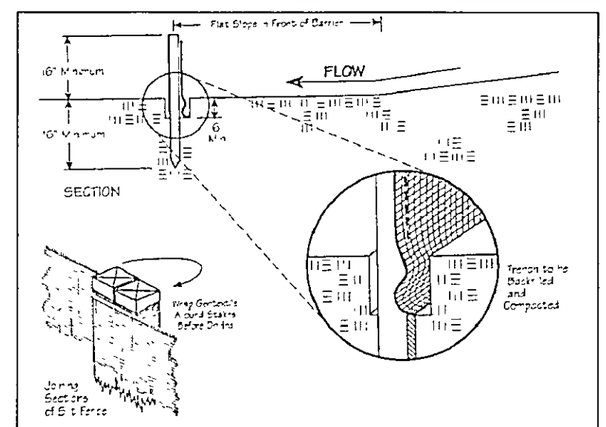

EROSION AND SEDIMENT CONTROL SCHEDULE

INGRESS-EGRESS

A STONE ACCESS DRIVE COMPLETE WITH UNDER LYING GEO-TEXTILE FABRIC (20 FEET WIDE AND 50 FEET LONG) FOR INGRESS AND EGRESS AT THE SITE SHALL BE INSTALLED. THIS DRIVE SHALL BE THE ONLY ENTRANCE AND EXIT TO THE SITE.

SILT FENCE

ALL SILT FENCE SHALL BE INSTALLED PRIOR TO ANY EARTHWORK ACTIVITIES AT THE SITE IN THE LOCATIONS SHOWN ON THE SITE PLAN AS WELL AS ALONG THE FRONT OF ANY LOT THAT SLOPES TOWARDS THE STREET.

TEMPORARY SEEDING

DISTURBED AREAS OF THE SITE THAT ARE TO REMAIN IDLE FOR MORE THAN THIRTY (30) DAYS SHALL BE PROPERLY SEEDED AND STRAW MULCHED WITHIN SEVEN (7) DAYS OF COMPLETION OF INITIAL GRADING. TEMPORARY SEEDING AND MULCHING OF A THIRTY (30) FOOT STRIP OF THE ENTIRE FRONT OF THE LOT SHALL BE MAINTAINED ON THE SITE ONCE INITIAL GRADING IS COMPLETE.

STABILIZATION OF CRITICAL AREAS WITHIN FIFTY (50) FEET OF ANY STREAM OR WETLAND SHALL BE COMPLETE WITHIN TWO (2) DAYS OF THE DISTURBANCE IF THE SITE IS TO REMAIN INACTIVE FOR LONGER THAN FOURTEEN (14) DAYS.

MULCHING

STRAW-MULCH SHALL BE APPLIED AT A RATE OF 1 BALE PER EVERY TEN (10) FEET OF CURB, AT A WIDTH OF THIRTY (30) FEET OF THE ENTIRE LENGTH OF THE LOT. *WOOD CHIPS* MAY ALSO BE USED BUT MUST BE SPREAD AT A MINIMUM DEPTH OF FOUR INCHES OVER THE THIRTY-FOOT WIDTH AND MUST BE ACCOMPANIED BY A PROPERLY INSTALLED SILT FENCE.

MAINTENANCE

EROSION AND SEDIMENT CONTROLS SHALL BE INSPECTED EVERY SEVEN (7) DAYS OR WITHIN 24 HOURS OF A 0.5" OR GREATER RAINFALL EVENT.
NECESSARY REPAIRS SHALL BE MADE AT THIS TIME.

NOTE:

ALL EROSION AND SEDIMENT CONTROL SPECIFICATIONS, APPLICATIONS, AND TIMETABLES ARE BASED OF THE DESCRIPTIONS AND STANDARDS OF THE OHIO DEPARTMENT OF NATURAL RESOURCES "RAINWATER AND LAND DEVELOPMENT MANUAL" AND CAN BE FOUND IN THE LAKE COUNTY EROSION AND SEDIMENT CONTROL RULES AS ADOPTED DECEMBER 21, 1999.

THE SPECIFIED EROSION AND SEDIMENT CONTROL STANDARDS ARE GENERAL GUIDELINES AND SHALL NOT LIMIT THE RIGHT OF THE COUNTY TO IMPOSE, AT ANY TIME, ADDITIONAL, MORE STRINGENT REQUIREMENTS. NOR SHALL THE STANDARDS LIMIT THE RIGHT OF THE COUNTY TO WAIVE, IN WRITING, INDIVIDUAL REQUIREMENTS.

FORM W:\BLOCKS\FORMS\BCGA3-SHARP.DWG

02007-05

REVISIONS	BY

Barrington CONSULTING GROUP, INC.
9114 TYLER BLVD., MENTOR, OHIO 44060
PHONE 440.205.1260 FAX 440.205.1262
BCG@BarringtonCGI.com

STATE OF OHIO — DAVID W. NOVAK S-7507 — REGISTERED SURVEYOR

Erosion and Sediment Control Plan

SIL 5 BELLMORE DR. PAINESVILLE TWP. OH. 44077
BELLMORE SUBDIVISION VOL. 44 PG. 21

LITTLE MOUNTAIN HOMES, INC.

DRAWN	WSO
CHECKED	DWN
DATE	JULY 26, 2005
SCALE	1" = 30'
JOB NO	02007-05
SHEET	3 OF 5 SHEETS

W:\02007\02007SL 02007 05.dwg 08/17/2005 02:16:13 PM Copyright Barrington Consulting Group