SEPTIC MOUND DETAIL

NO SCALE

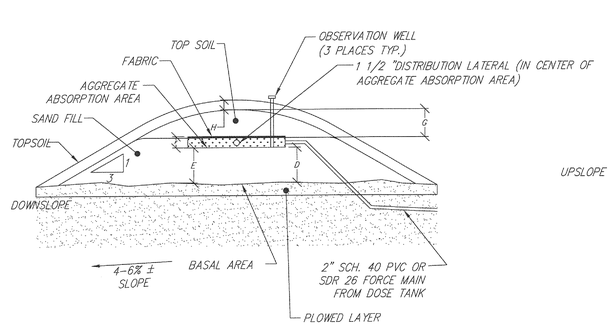

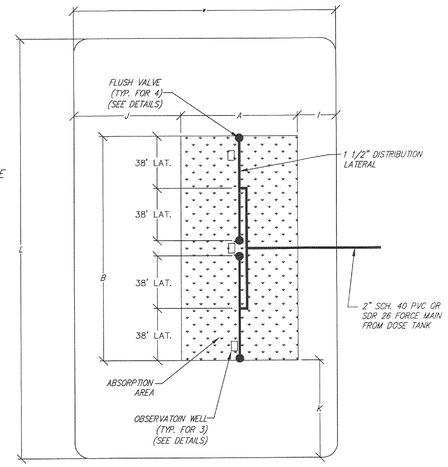

MOUND DIMENSIONS

A	3'-0"
B	160'
D	6"
E	8"
F	9"
G	6"
H	8"
I	4'-6"
J	7'-0"
K	6'-0"
L	172'-0"
W	14'-6"

SYSTEM NOTES

DISTRIBUTION LATERAL TO BE CENTER FEED (@ 25% EACH WAY FROM CENTER).

DISTRIBUTION LATERAL TO BE 1 1/2" DIAMETER WITH 1/8" PERFORATIONS AT 24" CENTERS.

19 PERFORATIONS PER LATERAL (76 PERFORATIONS TOTAL IN 4 LATERALS).

DISTAL HEAD PRESSURE REQUIRED AT EACH END SHALL BE 5 FT.

PUMP SHALL PROVIDE 35 GPM (MIN.) @ 20 FT. TDH (MIN.).

ORIFICE SHIELDS SHALL BE PLACED ON THE DISTRIBUTION LATERAL OR DISTRIBUTION LATERAL SHALL BE PLACED IN A 4" DIA. PERFORATED PVC PIPE.

DOSE VOLUME = 46 GAL. PER DOSE (1.75" BETWEEN "PUMP ON" AND "PUMP OFF" FLOAT)

SEE MOUND CALCULATIONS FOR ADDITIONAL INFO.

SEPTIC MOUND CONSTRUCTION NOTES:

MOUND SHALL BE INSTALLED ALONG CONTOURS.

INSTALLER SHALL CONTACT DESIGN ENGINEER IN THE EVENT THAT ANY PORTION OF THE SYSTEM IS CHANGED DUE TO SITE CONDITIONS. DESIGN ENGINEER SHALL APPROVE OF ANY CHANGES.

THE INSTALLER SHALL SCHEDULE A SYSTEM STARTUP WHERE THE INSTALLER, EQUIPMENT SUPPLIER, LOCAL HEALTH DEPARTMENT, AND DESIGN ENGINEER ARE ALL PRESENT. THE TANKS SHALL BE FULL OF WATER SO THAT PUMP TESTS CAN BE PERFORMED. THE START UP SHALL INCLUDE DRAW DOWN TESTS, PUMP CYCLING TESTS, AND MOUND PRESSURE TESTS. THE INSTALLER SHALL PROVIDE 5 FT. LONG CLEAR PLASTIC PIPE THAT CAN BE SCREWED INTO THE FLUSH VALVES. THE WATER LEVEL SHALL BE CHECKED IN EACH TUBE AND SHALL BE EQUAL. IN THE EVENT THAT THE WATER LEVEL IS NOT EQUAL, ADJUSTMENTS SHALL BE MADE IN THE LATERALS, VALVES AND/OR PIPING SO THAT THE PRESSURE WITHIN THE LATERALS IS EQUAL THROUGHOUT.

THE LOCATION OF THE MOUND IS TO BE STAKED BY CONTRACTOR PRIOR TO BEGINNING CONSTRUCTION.

DETERMINE WHERE THE PIPE FROM THE PUMPING CHAMBER CONNECTS TO THE DISTRIBUTION SYSTEM IN THE MOUND.

TRENCH AND LAY THE EFFLUENT PIPE FROM THE PUMPING CHAMBER TO THE MOUND. CUT AND CAP THE PIPE ONE FOOT BENEATH THE GROUND SURFACE. LAY THE PIPE BELOW THE FROST LINE. SLOPE THE PIPE UNIFORMLY BACK TO THE PUMPING CHAMBER SO THAT THE LINE DRAINS AFTER DOSING. BACKFILL AND COMPACT THE SOIL AROUND THE PIPE TOO PREVENT BACK SEEPAGE OF EFFLUENT ALONG THE PIPE.

CHECK THE MOISTURE CONTENT OF THE SOIL AT 7 TO 8 INCHES DEEP. IF IT IS TOO WET, SMEARING AND COMPACTION WILL RESULT. SOIL MOISTURE CAN BE DETERMINED BY ROLLING A SOIL SAMPLE BETWEEN THE HANDS. IF IT ROLLS INTO A RIBBON, THE SITE IS TO WET TO PREPARE. IF THE SOIL CRUMBLES, SOIL PREPARATION CAN PROCEED.

CUT THE TREES TO GROUND LEVEL. REMOVE EXCESS VEGETATION BY MOWING. PREPARE THE SITE USING A MOLDBOARD OR CHISEL PLOW BY PLOWING ALONG THE CONTOUR. ROTOTILLING THE SITE IS NOT PERMITTED. CONSTRUCTION OF THE MOUND SHALL BEGIN AS SOON AS THE BASE AREA HAS BEEN PLOWED. THE CONTRACTOR SHALL AVOID RUTTING OF THE PLOWED AREA WITH VEHICULAR TRAFFIC.

EXTEND THE EFFLUENT PIPE TO SEVERAL FEET ABOVE THE GROUND SURFACE.

PLACE THE SAND FILL MATERIAL WHICH HAS BEEN PROPERLY SELECTED AROUND THE EDGE OF THE PLOWED AREA. KEEP THE WHEELS OF THE TRUCKS OFF PLOWED AREAS. MINIMIZE TRAFFIC ON THE DOWN SLOPE SIDE OF THE MOUND. WORK FROM THE END AND UPSLOPE SIDE.

SAND FILL MATERIAL SHALL BE CLEAN CONCRETE SAND (C-33) WITH EFFECTIVE SIZE WITHIN 0.15-0.30MM AND UNIFORMITY COEFFICIENT WITHIN 4-6.

PLACE THE SAND FILL MATERIAL TO THE REQUIRED DEPTH WHICH IS THE TOP OF THE TRENCHES. SHAPE SIDES TO THE DESIRED SLOPE.

FORM THE TRENCHES. HAND LEVEL THE BOTTOM OF THE TRENCHES. THE BOTTOMS SHALL BE AT THE SAME ELEVATION AND LEVEL.

PLACE THE COARSE AGGREGATE IN THE TRENCHES (9" TOTAL WITH 6" MINIMUM BENEATH DISTRIBUTION PIPE AND AT LEAST 1" OVER DISTRIBUTION PIPE). AGGREGATE SHALL BE #57 WASHED GRAVEL.

PLACE THE DISTRIBUTION SYSTEM ON THE AGGREGATE. CONNECT THE MANIFOLD TO THE PIPE FROM THE PUMPING CHAMBER. SLOPE THE MANIFOLD TO THE EFFLUENT PIPE. LAY LATERALS LEVEL, REMOVING DIPS AND RISES.

PLACE 2 INCHES OF AGGREGATE OVER THE DISTRIBUTION PIPES. (TOTAL OF 9" AGGREGATE MINIMUM)

INSPECTION TO BE CONDUCTED BY THE AT THE FOLLOWING PHASES OF CONSTRUCTION THE CUYAHOGA COUNTY HEALTH DEPARTMENT.

1. AFTER PREPARATION OF THE BASAL AREA.
2. AFTER PLACEMENT OF THE MOUND FILL MATERIAL AND MOUND DISTRIBUTION LATERALS.
3. AFTER PLACEMENT OF REMAINING FILL, TOPSOIL AND SEEDING.

PLACE 4 TO 5 INCHES OF NON-COMPACTED STRAW OR GEOTEXTILE FABRIC OR OTHER EQUIVELENT PRODUCT OVER THE AGGREGATE.

PLACE TOPSOIL ON TOP OF THE TRENCHES TO A DEPTH OF 8 INCHES IN THE CENTER AND 6 INCHES AT THE OUTER EDGE OF THE TRENCHES.

LANDSCAPE THE MOUND BY SEEDING AND MULCHING. A MIXTURE OF 90% BIRDSFOOT TREEFOIL AND 10% TIMOTHY MAY BE USED IF THE MOUND WILL NOT BE MANICURED. IF MANICURING IS DESIRED, A COMBINATION OF 60% BLUEGRASS, 30% CREEPING RED FESCUE AND 10% ANNUAL RYE GRASS MAY BE USED. SHRUBS CAN BE PLANTED AROUND THE BASE AND UP THE SIDE SLOPES. THEY SHOULD BE SOMEWHAT MOISTURE TOLERATE SINCE THE TOW OF THE MOUND MAY BE SOMEWHAT MOIST DURING VARIOUS TIMES OF THE YEAR. ALL LAWS AND RULES OF THE LAKE COUNTY GENERAL HEALTH DISTRICT AND THE OHIO DEPARTMENT OF HEALTH PERTAINING TO INDIVIDUAL SEWAGE DISPOSAL AND WATER SUPPLY SYSTEMS SHALL BE FOLLOWED.

RESIDENCE MUST UTILIZE WATER SAVING TOILETS, SHOWERHEADS AND FAUCETS.

DRAINAGE IMPROVEMENTS OR CHANGES FROM THE EXISTING GRADE NOTED ON THE APPROVED PLAN SHALL BE INSTALLED PRIOR TO SEWAGE DISPOSAL SYSTEM CONSTRUCTION.

NO OPEN BURNING WILL OCCUR DURING CONSTRUCTION.

SURFACE WATER SHALL BE DIVERTED AWAY FROM THE MOUND AREA BY THE USE OF SWALES AND INTERCEPTOR DRAIN.

SEWAGE LIFT PUMP SHALL CONFORM WITH THE CURRENT EDITION OF THE NATIONAL ELECTRICAL CODE.

ALL ELECTRICAL CONDUIT SHALL BE PVC.

MECHANICAL COMPONENTS SHALL BE INSTALLED IN A PROPERLY VENTED LOCATION AND ALL VENTS, AIR INTAKES AND AIR HOSES SHALL BE PROTECTED FROM SNOW, ICE OR WATER VAPOR ACCUMULATIONS. INSTALLATION SHALL BE MADE TO MINIMIZE RELEASE OF ODORS OR AEROSOLS.

MECHANICAL COMPONENTS INSTALLED IN OR AT THE SEWAGE TANK SHALL BE PROTECTED AGAINST DAMAGE OR IMPAIRMENT OR EFFICIENCY BY FLOODING, FOAMING OR SURCHARGING. PUMPS MUST BE READILY REMOVABLE FROM THE MANHOLE IN CASE OF PUMP FAILURE.

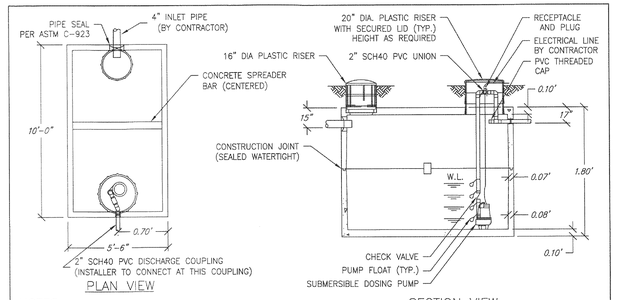

NOTES:

1. REINFORCED PRECAST CONCRETE TO HAVE A COMPRESSIVE STRENGTH OF 1500 PSI @ 28 DAYS.
2. PRECAST CONCRETE TANK SHALL MEET OR EXCEED SPECIFICATIONS AS SET BY O.A.C. RULE 3701-293-11.
3. CONCRETE JOINT SEALANT CONFORMS TO ASTM C-990.
4. INLET AND DISCHARGE PIPE SEALS CONFORM TO ASTM C-923.
5. LABEL TOP OF TANK AS FOLLOWS:
   MACK INDUSTRIES LOGO
   500 GAL. TANK DOSING CAPACITY
   DATE OF MANUFACTURE
   MAXIMUM BURIAL DEPTH OF 2'-0"

RESIDENTIAL DOSING TANK (1500 GAL.)		
DRAWN BY: DWH	SCALE: 3/8"=1'-0"	DRAWING NO.: RESDOSING
DATE: 3-10-07	REV: 2) 6/26/07 CJ	
REV: 1.) O.D.H. 2007 COMPLIANCE,O.A.C. RULE 3701-29-11		

THIS DRAWING IS THE PROPERTY OF MACK INDUSTRIES, INC., AND IT OR THE TECHNOLOGY CONTAINED HEREIN MAY NOT BE REPRODUCED NOR USED EXCEPT AS ORIGINALLY INTENDED WITHOUT THE EXPRESSED CONSENT OF MACK INDUSTRIES, INC.

MACK INDUSTRIES, INC.
201 COLUMBIA ROAD, VALLEY CITY, OHIO 44280 (216)483-3111

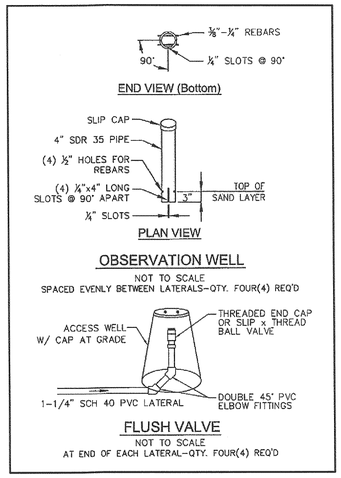

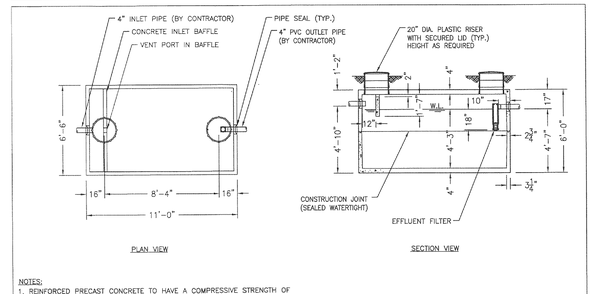

NOTES:

1. REINFORCED PRECAST CONCRETE TO HAVE A COMPRESSIVE STRENGTH OF 5000 PSI @ 28 DAYS.
2. PRECAST CONCRETE TANK SHALL MEET OR EXCEED SPECIFICATIONS AS SET BY O.A.C. RULE 3701-293-11.
3. CONCRETE JOINT SEALANT CONFORMS TO ASTM C-990.
4. INLET AND DISCHARGE PIPE SEALS CONFORM TO ASTM C-923.
5. EFFLUENT FILTER RETAINS SOLIDS GREATER THAN 1/16" AND CONFORMS TO ASTM C-1227.
6. LABEL TOP OF TANK AS FOLLOWS:
   MACK INDUSTRIES LOGO
   2000 GAL. TANK CAPACITY
   DATE OF MANUFACTURE
   MAXIMUM BURIAL DEPTH OF 2'-0"

STATE APPROVAL PENDING

2000 GALLON SEPTIC TANK		
DRAWN BY: DWH	SCALE: 1/4"=1'-0"	DRAWING NO.: 2000 SEPTIC
DATE: 3-10-07	REV: 1.) 4/12/07 DWH	
REV: 1.) O.D.H. 2007 COMPLIANCE,O.A.C. RULE 3701-29-11		

THIS DRAWING IS THE PROPERTY OF MACK INDUSTRIES, INC., AND IT OR THE TECHNOLOGY CONTAINED HEREIN MAY NOT BE REPRODUCED NOR USED EXCEPT AS ORIGINALLY INTENDED WITHOUT THE EXPRESSED CONSENT OF MACK INDUSTRIES, INC.

MACK INDUSTRIES, INC.
201 COLUMBIA ROAD, VALLEY CITY, OHIO 44280 (216)483-3111

INTERCEPTOR DRAIN CROSS SECTION DETAIL

NO SCALE

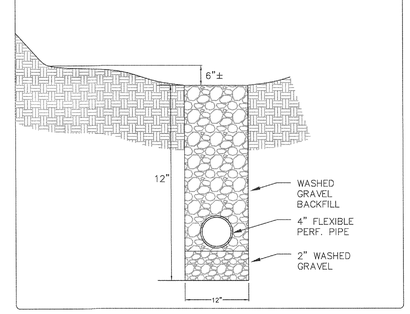

HYDRAULIC PROFILE

NO SCALE

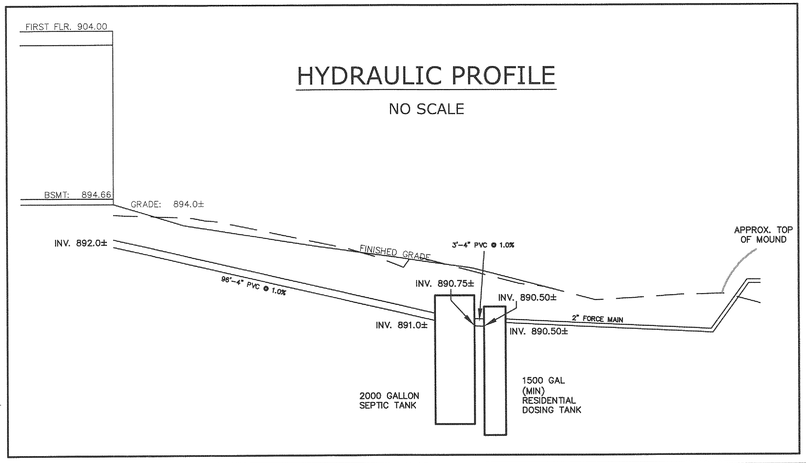

BUILDING SEWER CROSS SECTION DETAIL

NO SCALE

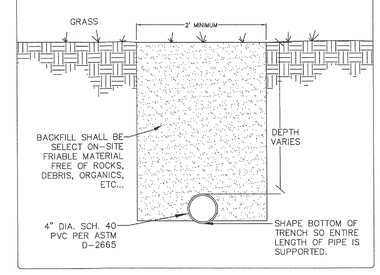

REV. No.		DATE	BY

STATE OF OHIO PROFESSIONAL ENGINEER DUSTIN R. KEENEY E-65515 REGISTERED

DATE: 06/08/15
SCALE: HOR. 1"= 30'
VERT. NA
FOLDER: DWG
FILENAME: SITE PLAN
TAB: DETAILS
DRAWN: SRV

ALPENROSE SUBDIVISION
SUBLOT 8

City of Kirtland – Lake County – Ohio

polaris Engineering & Surveying

POLARIS ENGINEERING & SURVEYING, INC.
34600 CHARDON ROAD – SUITE D
WILLOUGHBY HILLS, OHIO 44094
(440) 944-4433 (440) 944-3722 (Fax)
www.polaris-es.com

DETAILS

CONTRACT No.	
15118	
SHEET	OF
02	02