Abbreviated Site Plan - Erosion and Sediment Control Notes (Individual Homesites) (5-13-05)

Ingress-Egress
A stone access drive complete with under lying geo-textile fabric (20 feet wide and 50 feet long) for ingress and egress at the site shall be installed. This drive shall be the only entrance and exit to the site.

Silt Fence
All silt fence shall be installed prior to any earthwork activities at the site in the locations shown on the site plan as well as along the front of any lot that slopes towards the street.

Temporary Seeding
Disturbed areas of the site that are to remain idle for more than Twenty-one **(21)** days shall be properly seeded and straw mulched within seven **(7)** days of completion of initial grading. Temporary seeding and mulching of a thirty **(30)** foot strip of the entire front of the lot shall be maintained on the site once initial grading is complete.

Stabilization of critical areas within fifty **(50)** feet of any stream or wetland shall be complete within two **(2)** days of the disturbance if he site is to remain inactive for longer than fourteen **(14)** days.

Mulching
Straw-mulch shall be applied at a rate of 1 bale per every ten **(10)** feet of curb, at a width of thirty **(30)** feet of the entire length of the lot. *Wood chips* may also be used but must be spread at a minimum depth of four inches over the thirty-foot width and must be accompanied by a properly installed silt fence.

Maintenance
Erosion and sediment controls shall be inspected every seven **(7)** days or within 24 hours of a 0.5" or greater rainfall event.
Necessary repairs shall be made at this time.

Note:
All erosion and sediment control specifications, applications, and timetables are based of the descriptions and standards of The Ohio Department of Natural Resources "Rainwater and Land Development Manual" and can be found in the Lake County Erosion and Sediment Control Rules as adopted December 21, 1999.

The specified erosion and sediment control standards are general guidelines and shall not limit the right of the county to impose, at any time, additional, more stringent requirements. Nor shall the standards limit the right of the county to

NOTE: The Contractor/Builder Shall Notify the Approving Engineer if ground water is observed during the excavation of the basement.

-Contractor To Verify Depth And Location Of Utility Connections;
-See Architect Plans For Complete House Dimensions.
- Outlet roof/gutters to splash blocks
- Sump footer drains to swale

BUILDER SHALL CONTACT OUPS PRIOR TO SITE GRADING, ORWELL NATURAL GAS CO. HAS A GASLINE ALONG THE EASTERLY SIDE OF THE CARTPATH.

"I, THE UNDERSIGNED, HEREBY CERTIFY THAT THIS TOPOGRAPHY, INDICATED BY CONTOURS AND ELEVATIONS SHOWN HEREON, REPRESENT AN ACTUAL FIELD SURVEY MADE BY ME ON THE 26th DAY OF September 2011 AND THAT THE ELEVATIONS WERE TAKEN AT APPROPRIATE INTERVALS AND THAT, AS OF THAT DATE, THEY EXISTED AS INDICATED.

I FURTHER CERTIFY THAT THIS PLAN WAS PREPARED BY ME FROM AN ACTUAL BOUNDARY SURVEY AND IRON PINS WERE FOUND OR SET AT THE PROPERTY CORNERS AND ALL OF WHICH IS CORRECT TO THE BEST OF MY KNOWLEDGE AND BELIEF."

James R. Pegoraro Jr. P.S. 8150

EXISTING UNDERGROUND UTILITIES NOTE:
THE SIZE & LOCATION, BOTH HORIZONTAL AND VERTICAL, OF THE UNDERGROUND UTILITIES SHOWN HEREON, HAVE BEEN OBTAINED BY A SEARCH OF AVAILABLE RECORDS. VERIFICATION BY FIELD OBSERVATION HAS BEEN CONDUCTED WHERE PRACTICAL. HOWEVER, LDC INC. DOES NOT GUARANTEE THE COMPLETENESS NOR ACCURACY THEREOF.

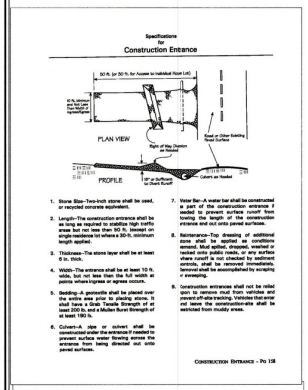

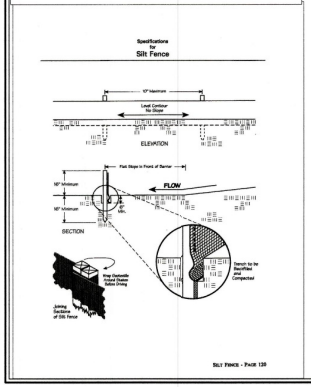

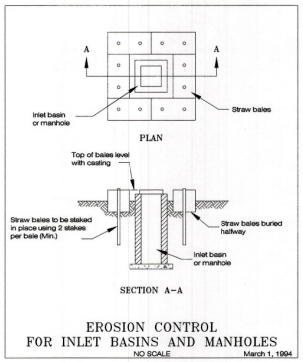

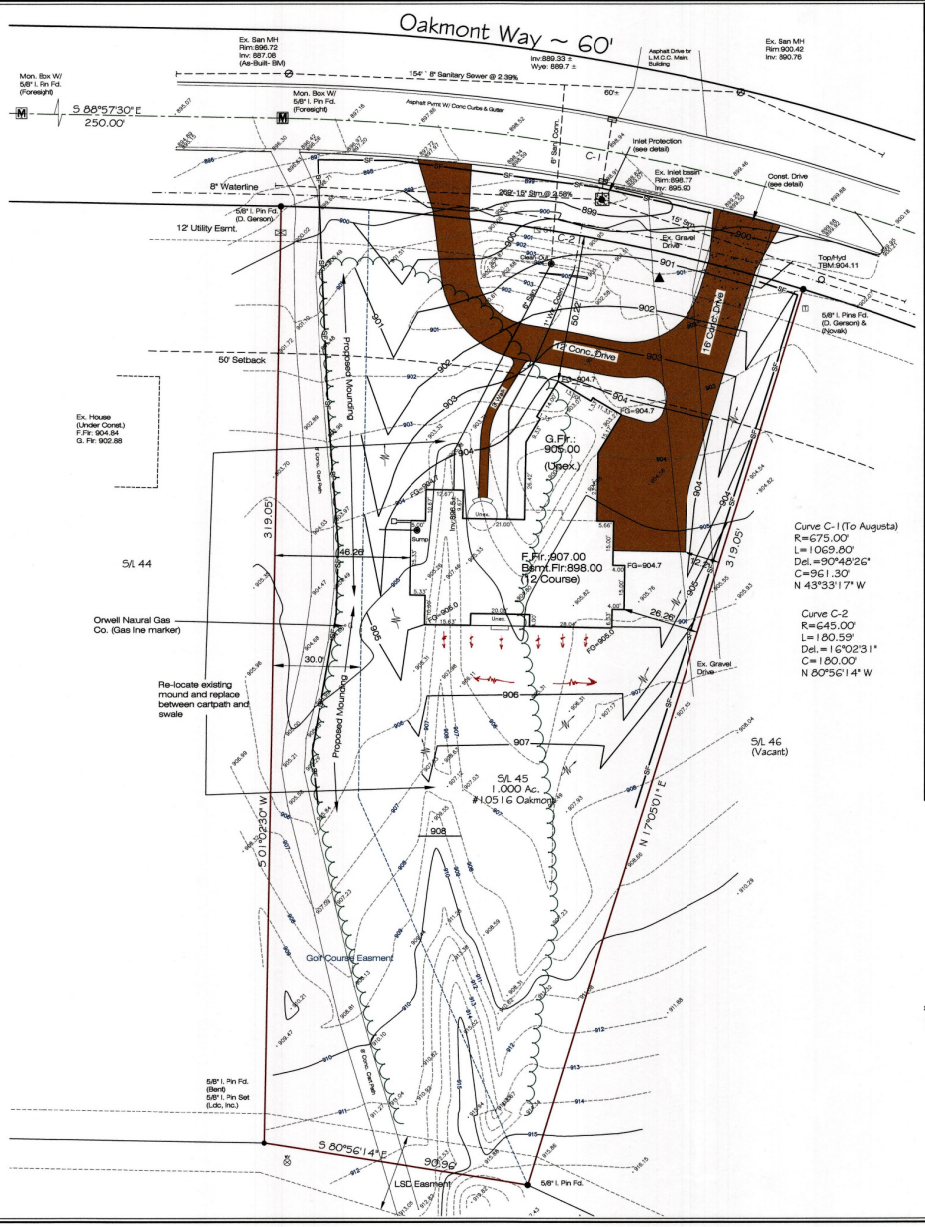

SITE PLAN

For : Chadwick Homes
CLIENT

138 Charlotte St., Painesville OH 44077
ADDRESS STREET CITY

SUBLOT No.	SUBDIVISION NAME	VOL. PAGE
45	Little Mtn. C.C.	39-13

LOT	TRACT	CITY/TOWNSHIP	OHIO
2	3	Concord Township	

LAND DESIGN consultants
www.LDCinc.net
ENGINEERS · PLANNERS · SURVEYORS
9025 Osborne Drive Mentor, Ohio 44060
TEL: (440) 255-8463 (440) 951-LAND
FAX: (440) 255-9575

DESIGN CERTIFICATION

THIS PLAN WAS PREPARED BY ME, AND IS CORRECT TO THE BEST OF MY KNOWLEDGE AND BELIEF.

NAME 10/4/2011

CHECK LIST

LOT DIMENSIONS & BEARINGS
TIE TO NEAREST STREET
SUBLOT No. (PARCEL No.)
SURROUNDING OWNERS
BUILDING LINES (FRONT, SETBACK, SIDEYARD, REARYARD
FINISHED GRADES
DRIVE & APRON TYPE, WIDTH, THICKNESS
SIDEWALK TYPE, WIDTH, THICKNESS
CURBS TYPE, WIDTH, THICKNESS
WATER MAIN SIZE, LOCATION
SAN. SEWER SIZE, & GRADE, LOC.
SAN. MH. CASTI. TLEV., INV. ELEV.
STORM SEWER SIZE, & GRADE, LOC.
STORM SEWER MH. & GRADE, LOC.
STORM MH. CAST. ELEV., INV. ELEV.
FAYT TYPE, GRADE, CURBS
SAN. LATERAL SIZE
SAN. LATERAL SIZE & DUPLICATION
WELL LOCATION & ISOLATION RADIUS

STATE OF OHIO JAMES R. PEGORARO, JR. 8-8150 REGISTERED PROFESSIONAL SURVEYOR

"AS BUILT" CERTIFICATION

I HEREBY CERTIFY THAT THE CIRCLED INFORMATION IS EXISTING AS OBTAINED ON THE SITE _____ AND IS CORRECT TO THE BEST OF MY KNOWLEDGE AND BELIEF.

NAME

LEGEND

STORM MANHOLE
SANITARY MANHOLE
EXISTING CONTOURS
PROPOSED CONTOURS
FIRE: O.D. 3864
F.G.:904.9 = FIN.F.ELEV.
DIRECTION OF SURFACE DRAINAGE

DRAWN BY	SCALE
JRP	1"=20'
CHK'D BY/FIELD	DATE
	OCT/2011
1	
2	

ACCEPTED: CLIENT DATE

BENCHMARK:
Top/ Hydrant as shown: 904.11

GRAPHIC SCALE
20 0 10 20 40 80
(IN FEET)
1 inch = 20 ft.

2 WORKING DAYS BEFORE YOU DIG
CALL TOLL FREE 800-362-2764
OHIO UTILITIES PROTECTION SERVICE

DWG. NAME PENGC1-1102

Stormwater Management Plan Approved as submitted JAMES R. GILLIS County Drainage Engineer By J.S. Date 10/12/11