GENERAL NOTES – DRIP DISPOSAL

1. ALL INSTALLATION AND CONSTRUCTION TECHNIQUES SHALL CONFORM TO COUNTY CODES AND STATE BOARD OF HEALTH "SEWAGE HANDLING AND DISPOSAL REGULATIONS" PERTAINING TO ON SITE SEWAGE SYSTEMS AND THE PERMIT FOR THIS SITE.
2. THE INSTALLATION OF THIS SYSTEM SHALL BE IN ACCORDANCE WITH SPECIFICATIONS AND PROCEDURES AS SUPPLIED BY THE MANUFACTURER OF THE EQUIPMENT.
3. ALL PVC PIPE AND FITTINGS SHALL BE PVC SCH 40 TYPE 1 RATED FOR PRESSURE APPLICATIONS. ALL GLUED JOINTS SHALL BE CLEANED AND PRIMED WITH PURPLE (DYED) PVC PRIMER PRIOR TO BEING GLUED.
4. ALL CUTTING OF PVC PIPE, FLEXIBLE PVC AND DRIPPER TUBING SHALL BE ACCOMPLISHED WITH PIPE CUTTERS APPROVED BY MANUFACTURER. NO SAWING OF PVC, FLEXIBLE PVC OR DRIPPER TUBING ALLOWED.
5. ALL PVC PIPE, FLEXIBLE PVC AND DRIPPER TUBING IN THE WORK AREA SHALL HAVE THE ENDS COVERED WITH DUCT TAPE TO PREVENT CONSTRUCTION DEBRIS FROM ENTERING THE PIPE. PRIOR TO GLUING ALL JOINTS SHALL BE INSPECTED FOR AND CLEARED OF ANY CONSTRUCTION DEBRIS.
6. NO WET WEATHER INSTALLATION IS PERMITTED.
7. NO ACTIVITY ON DRAINFIELD AREA OTHER THAN MINIMUM REQUIRED TO INSTALL SYSTEM. DO NOT PARK EQUIPMENT, DRIVE LARGE EQUIPMENT OVER, OR STORE MATERIALS ON DRAINFIELD SITE.
8. HORIZONTAL SPACING BETWEEN DRIPPER LINES AND THE INSTALLATION DEPTH SHALL BE AS SPECIFIED.
9. THE BUILDING SEWER SHALL BE 4" SCH40 PVC WITH A MINIMUM SLOPE OF 1/4" PER FOOT. THERE SHALL BE NO BENDS GREATER THAN 45 DEGREES. CLEANOUTS SHOULD BE PROVIDED EVERY 25 FEET. FOR CONSTRUCTION TECHNIQUES REFER TO THE "SEWAGE HANDLING AND DISPOSAL REGULATIONS".
10. IF TREES ARE TO BE REMOVED FROM SITE, CUT STUMPS FLUSH WITH GROUND. REMOVE BY HAND.
11. GRAVEL BASE UNDER CENTRAL CONTROL UNIT IS TO BE DRAINED VIA 2" PVC PIPE, SCREENED AT INLET AND OUTLET, DISCHARGE TO BE AT GRADE DOWN SLOPE (TO ENSURE DRAINAGE OF SURFACE WATER FROM UNIT).
12. THE CONTRACTOR SHALL BE CERTIFIED TO INSTALL THIS TYPE OF SYSTEM BY THE MANUFACTURER AND SHALL HOLD A PRE CONSTRUCTION MEETING WITH THE INDIVIDUALS RESPONSIBLE FOR SOIL EVALUATION, PERMITTING AND INSPECTIONS PRIOR TO SITE WORK BEGINNING TO INSURE PROTECTION OF THE SITE CONDITIONS AND TO ENSURE THE SYSTEM IS INSTALLED ACCORDING TO DESIGN.
13. IF SITE CONDITIONS ARE DETERMINED TO REQUIRE THE INSTALLATION OF THE SYSTEM TO DEVIATE FROM THESE PLANS, ALL SITE WORK SHALL STOP IMMEDIATELY AND THE DESIGNER SHALL BE NOTIFIED. ANY ONGOING WORK SHALL BE AT THE SOLE RESPONSIBILITY OF THE CONTRACTOR.
14. DRAINFIELD SUPPLY AND RETURN LINES TO BE INSTALLED AT ADEQUATE DEPTH TO PREVENT FREEZING.

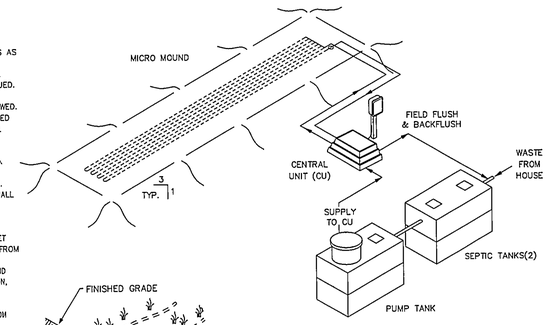

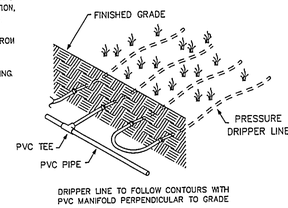

SUBSURFACE DISTRIBUTION SYSTEM

SCOPE: DOMESTIC SEWAGE WILL FLOW BY GRAVITY THROUGH THE SEPTIC TANK THEN INTO A FINAL DOSING TANK. THE CENTRAL UNIT WILL DISPOSE OF THE EFFLUENT BY ALTERNATELY DOSING MULTIPLE ZONES IN THE ABSORPTION AREA.

THE CENTRAL UNIT COMPRISES BOTH THE CONTROL AND THE HYDRAULIC UNITS.

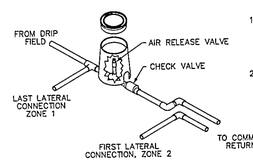

NOTE:
1. THE AIR RELEASE VALVE SHALL BE PLACED AT THE HIGHEST POINT ON THE RETURN LINE OF EACH ZONE.
2. EACH ZONE TO HAVE THE SAME VALVE BOX SETUP AND THEREAFTER CONNECTED.

AIR RELEASE & CHECK VALVE DETAIL
NTS

SHT 1 COVER SHEET
SHT 2 SITE PLAN
SHT 3 TREATMENT SCHEMATIC (MOUND DETAIL)
SHT 4 HYDRAULIC PROFILE & DRIP DETAIL
SHT 5 PUMP & CONTROL DETAIL
SHT 6 CALCULATION SHEET
SHT 7 PUMP CURVE

AMERICAN MANUFACTURING CO.
5517 WELLINGTON RD. GAINESVILLE VA 20155; 703-754-0077

PROJECT NAME:	DR. BY:	DATE:
	CK. BY:	DATE:
	APP. BY:	DATE:
COUNTY:	TITLE: COVER SHEET	
REV. FILE:	SCALE:	SHEET OF

NOTES:
1. PLOW ENTIRE 139 'x 19.3' AREA OF DRAINFIELD (SAME WAY YOU WOULD A REGULAR MOUND).
2. ADD LAYER OF MOUND SAND INCORPORATING IT INTO/ONTO PLOWED BASAL AREA.
3. PLACE DRIP TUBING ON TOP OF SAND IN THE 139 'x 19.3' UPPER SECTION OF DRAINFIELD.
4. ADD LAYER OF MOUND SAND OVER TOP OF DRIP TUBING IN THE 139 'x 19.3' AREA
5. COVER ENTIRE 139 'x 19.3' AREA OF DRAINFIELD WITH A MINIMUM COVER OF 6" OF TOPSOIL WITH A TURTLE-BACK GRADE FOR POSITIVE DRAINAGE.
6. AN AGGRESSIVE TURF COVER OVER ENTIRE 139 'x 19.3' AREA IS RECOMMENDED (PREFERABLY SOD).

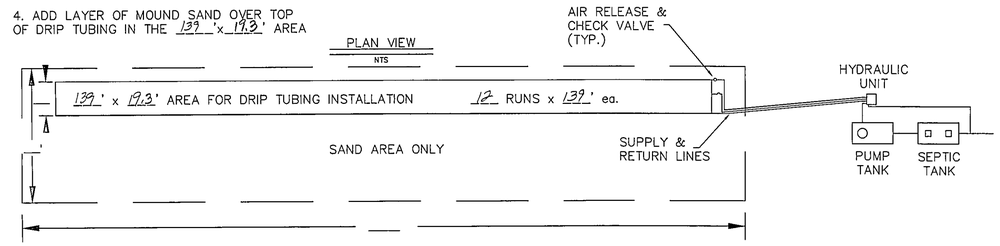

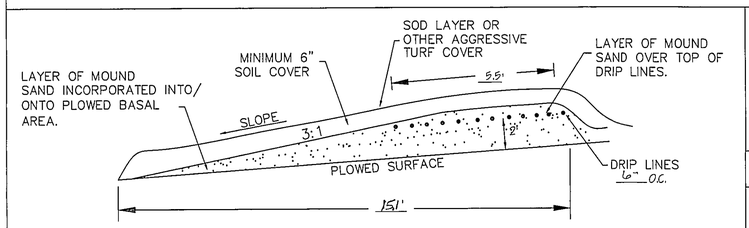

MICRO MOUND
CROSS-SECTION
NTS

BASAL AREA: 139 'x 19.3' = 2682 sqft
BASAL AREA LOADING: ___ gpd/sqft
SAND BED: 139 'x 19.3' = 2682 sqft
SAND BED LOADING: 0.44 gpd/sqft
DRIP TUBING: 12 x 139' = 1668 L.F.
ZONE 1: 6 runs x 139' = 834 L.F.
ZONE 2: 6 runs x 139' = 834 L.F.
LANDSCAPE LINEAR LOAD: 3.0 gpd/L.F.

AMERICAN MANUFACTURING COMPANY INC.
5517 WELLINGTON ROAD, GAINESVILLE VA 20155 PHONE : 703-754-0077

PROJECT NAME :	DRAFTER	DATE
	CHECKED	DATE
	APPROVED	DATE
COUNTY :	TITLE : TREATMENT SCHEMATIC	
DESIGNED BY:		
REVISION FILE: F:\ACAD\PACK99\CARR	SCALE : NTS	SHEET OF

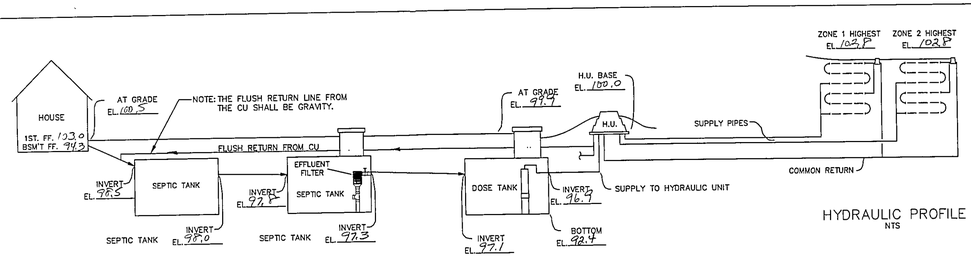

HYDRAULIC PROFILE
NTS

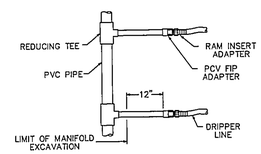

TYPICAL MANIFOLD CONNECTION
NTS

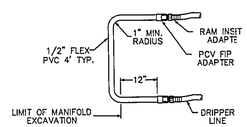

TYPICAL DRIP LOOP CONNECTION
NTS

AMERICAN MANUFACTURING CO.
5517 WELLINGTON RD. GAINESVILLE VA 20155; 703-754-0077

PROJECT NAME:	DR. BY:	DATE:
	CK. BY:	DATE:
	APP. BY:	DATE:
COUNTY:	TITLE: Hydraulc Profile & Dr Detail	
REV. FILE:	SCALE:	SHEET OF

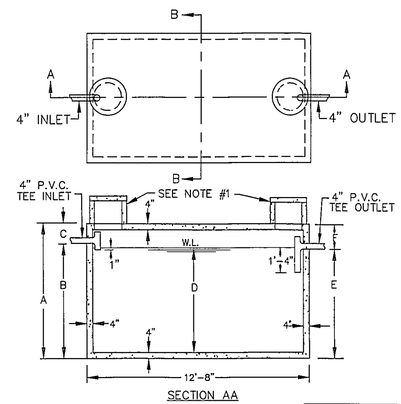

CAPACITY GAL.	A	B	C	D	E	F
2000	5'-6"	4'-2"	1'-4"	3'-7"	3'-11"	1'-7"
2250	5'-6"	4'-7"	0'-11"	4'-0"	4'-4"	1'-2"
2500	6'-4"	5'-0"	1'-4"	4'-5"	4'-9"	1'-7"
3000	7'-4"	5'-11"	1'-5"	5'-4"	5'-8"	1'-8"
3500	8'-4"	6'-9"	1'-7"	6'-2"	6'-6"	1'-10"
4000	9'-4"	7'-8"	1'-8"	7'-1"	7'-5"	1'-11"
5000	10'-4"	9'-5"	0'-11"	8'-10"	9'-2"	1'-2"

NOTES
A) 18" DIA. CONC. PLUG WITH HANDLE IS STANDARD EQUIPMENT.
B) 18" DIA. CONC. RISER, 15" OR 24" HIGH WITH CONC. LID IS OPTIONAL AT AN EXTRA CHARGE.

THE CONCRETE RISER ON THE OUTLET END WILL HAVE A MINIMUM 24" INSIDE DIAMETER.

2,000–5,000 GALLON SEPTIC TANKS

SCALE: NONE	APPROVED BY	DRAWN BY T.A.S.
DATE: 9/23/74		REVISED

MACK INDUSTRIES, INC.
VALLEY CITY OHIO 44280
DRAWING NUMBER P-5

STATE OF OHIO HARRY B JONES JR. 9-6343 REGISTERED PROFESSIONAL SURVEYOR

REV NO.	DESCRIPTION	DATE	BY	CHK'D
1	ADDED NEW HOUSE	5/20/04	N.S.	H.J.
2	CHANGED SEPTIC TO DRIP SYSTEM	6/23/04	N.S.	H.J.
3	Revised Dwg	7/22/08	NS	HJ

BABCOCK, JONES AND ASSOCIATES, INC
CIVIL ENGINEERS – SURVEYORS – LAND PLANNERS
PAINESVILLE OHIO 44077

DATE 12/4/03	SITE PLAN FOR TINA BAUCHER	SCALE NONE
DESIGN BY HJ		JOB NO 03-288
DRAWN BY NS	PARCEL NO. 8A-24A-11 HERMITAGE ROAD	SHEET 2 OF 2
APPROVED BY HJ	CONCORD TOWNSHIP LAKE COUNTY STATE OF OHIO	