Barrington CONSULTING GROUP, INC.
9114 TYLER BLVD., MENTOR, OHIO 44060
PHONE 440.205.1260 FAX 440.205.1262
www.BarringtonCGI.com
Civil Engineers - Surveyors - Land Planners

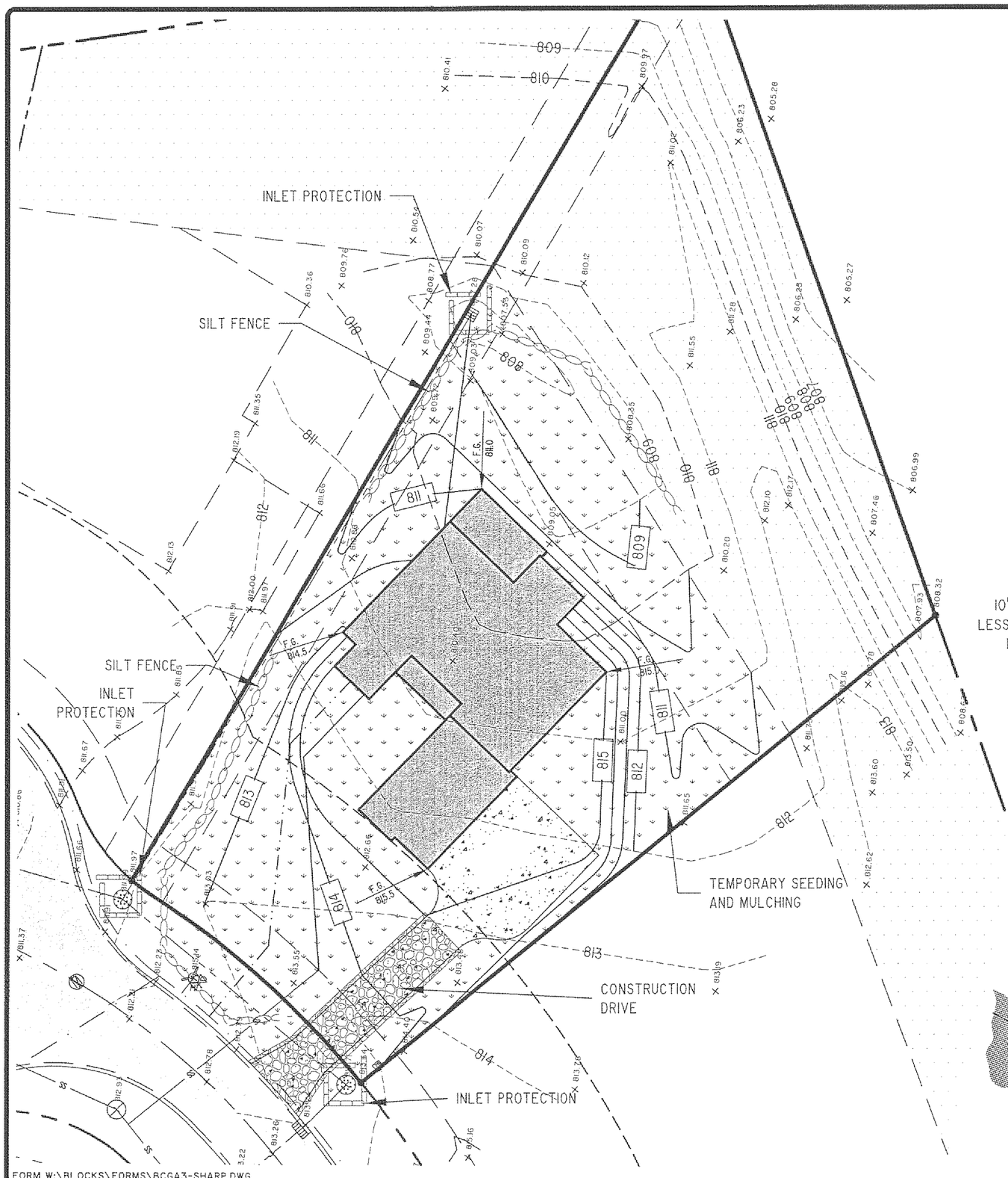

TEMPORARY SEEDING SPECIFICATIONS			
SEEDING DATES	SPECIES	LB./1000 FT.	PER AC.
MAR. 1 TO AUG. 15	OATS	3	4 BUSHEL
	TALL FESCUE	1	40 LB.
	ANNUAL RYEGRASS	1	40 LB.
	PERENNIAL RYEGRASS	1	40 LB.
	TALL FESCUE	1	40 LB.
	ANNUAL RYEGRASS	1	40 LB.
AUG. 16 TO NOV. 1	RYE	3	2 BUSHEL
	TALL FESCUE	1	40 LB.
	ANNUAL RYEGRASS	1	40 LB.
	WHEAT	3	2 BUSHEL
	TALL FESCUE	1	40 LB.
	ANNUAL RYEGRASS	1	40 LB.
	PERENNIAL RYEGRASS	1	40 LB.
	TALL FESCUE	1	40 LB.
	ANNUAL RYEGRASS	1	40 LB.
NOV. 1 TO SPRING SEEDING	USE MULCH ONLY, SODDING PRACTICES OR DORMANT SEEDING.		

NOTE: OTHER APPROVED SEED SPECIES MAY BE SUBSITUTED.

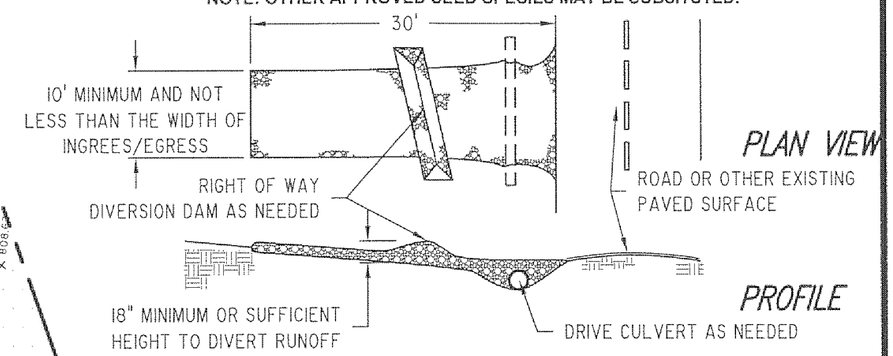

CONSTRUCTION DRIVE DETAIL

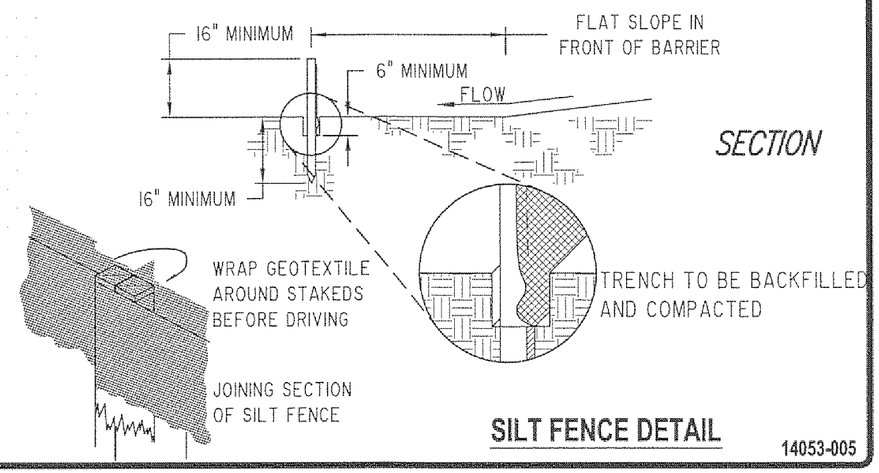

SILT FENCE DETAIL

14053-005

FORM W:\BLOCKS\FORMS\BCGA3-SHARP.DWG

REVISIONS	BY

Barrington CONSULTING GROUP, INC.
9114 TYLER BLVD., MENTOR, OHIO 44060
PHONE 440.205.1260 FAX 440.205.1262
www.BarringtonCGI.com

STATE OF OHIO
DAVID W. NOVAK
S-7507
REGISTERED
SURVEYOR

Erosion and Sediment Control Plan

6891 BRIDGECREEK DR., CONCORD TWP., OHIO 44077
S/L 5 BRIDGECREEK ESTATES VOL. 50 PG. 3

ENZOCO HOMES

DRAWN	WSO
CHECKED	DWN
DATE	MAY 16, 2014
SCALE	1" = 30'
JOB NO.	14053-005
SHEET	3 OF 3

M:\2014\14053\CD\14053-005.dwg, 5/16/2014 11:19:55 AM, Copyright Barrington Consulting Group