REVIEWED AND ACCEPTED
LAKE COUNTY GENERAL
HEALTH DISTRICT
Date 1-6-97 By Gerald B Morris

SEWAGE DISPOSAL PERMIT MUST BE OBTAINED BY A LAKE COUNTY LICENSED INSTALLER BEFORE INSTALLATION IS STARTED.

Grading Plan Approved
as shown and/or noted
THOMAS P. GILLES, P.E.
Lake County Engineer
By GJH Date 4-10-97
Swale along East Property line

ZONING PERMIT 0497-8681
ISSUED 4-8-97
SUBJECT TO APPROVAL BY:
~~Lake County Sanitary Eng.~~
Lake County Env. Dept. ☑
Lake County Planning Comm. ☐
Lake County Bldg. Dept. ☑

PRINTED
DEC 24 1996
LAKE INC.

LAKE, INC.
ENGINEERS & SURVEYORS

Rev. No.	Description	Date	By	CH'K'D
	REVISIED PER LAKE COUNTY HEALTH DEPT. ADDED 2-1000 GAL. SEPTIC TANKS	12\24\96	D.Abbott	

SITE PLAN for
SIGNATURE HOMES, Inc.

Drawn By D.Abbott
Filename: 96-32\96-32
Checked By:

SUBLOT # 5

Scale:
Horiz. 1" = 30'
Vert. 1" = 30'
Sheet No. Of

Lift Station

MINIMUM LIFT STATION SIZE SHALL BE 200 GALLONS

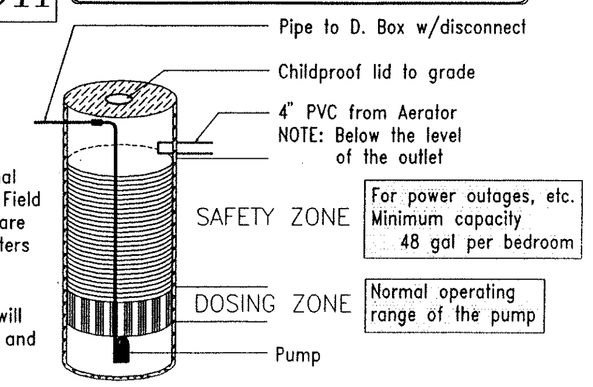

ADJUSTMENT OF THE FLOATS

The floats in the lift pump station are to be adjusted so that:

- The gallons in the dosing zone do not exceed the internal volume of the pipe in the ET Field
- An audible and visual alarm are activated if the water level enters the SAFETY ZONE

Electrical wiring for the lift station will be in conformance with local, state and national electric codes

Curtain Drain

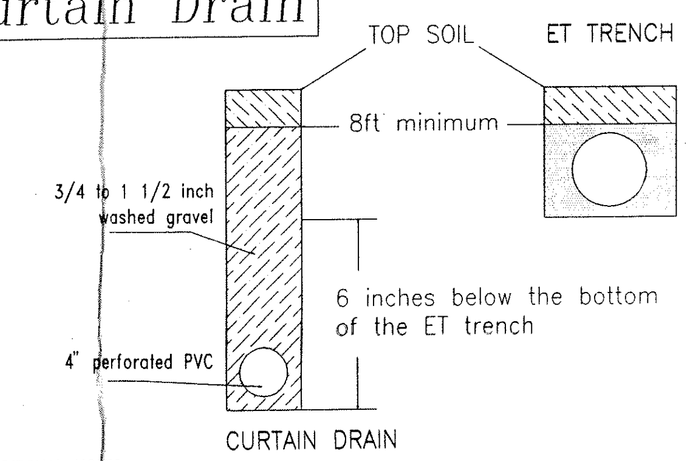

ADDITONAL NOTES:

- Minimum width of trench for curtain drain to be 12 inches
- Minimum slope of curtain drain will be 6 inches in 10`foot
- The curtain drain will have an inspection port at the collection point of all four sides
- The outlet of the curtain drain will be protected from the entrance of small animals
- This design is for fields with a maximum width of 56 feet including curtain drains. When width exceeds 56 feet, differential between trenches will be increased to 2.5 feet

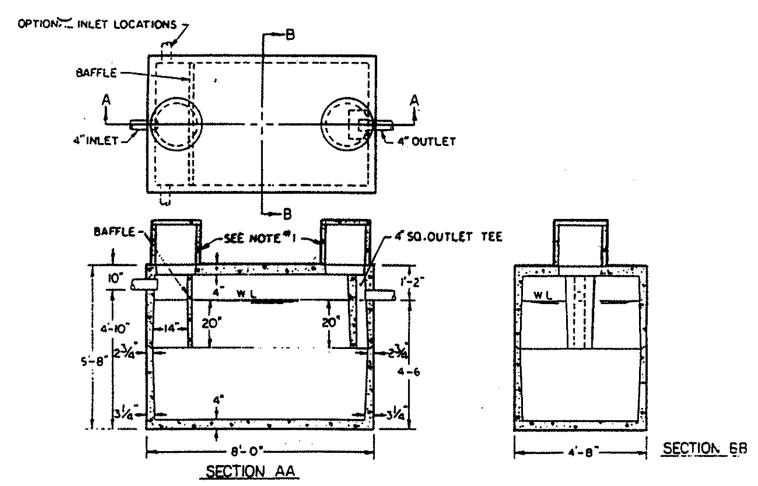

TYPICAL SEPTIC TANK

NTS

CONSTRUCTION NOTES

ALL CONSTRUCTION SHALL CONFORM TO THE LAKE COUNTY BOARD OF HEALTH AND THE LAKE COUNTY BUILDING DEPARTMENT REGULATIONS.

DRAINAGE IMPROVEMENTS OR CHANGES FROM EXISTING GRADE NOTED ON THE APPROVED PLAN SHALL BE INSTALLED PRIOR TO SEWAGE DISPOSAL SYSTEM CONSTRUCTION.

RESIDENCE MUST UTILIZE WATER SAVING TOILETS, SHOWERHEADS AND FAUCETS.

NO OPEN BURNING WILL OCCUR DURING CONSTRUCTION.

ROOF WATER, FOUNDATION DRAINAGE, CISTERN OVERFLOW, SURFACE DRAINAGE OR SUBSURFACE DRAINAGE SHALL NOT BE DISCHARGED INTO A BUILDING SEWER OR INTO A HOUSEHOLD SEWAGE DISPOSAL SYSTEM.

AERATION-TYPE TREATMENT SYSTEM SHALL CONFORM TO SECTION 840 OF THE LAKE COUNTY BOARD OF HEALTH REGULATIONS.

SEWAGE LIFT PUMP SHALL BE CAPABLE OF LIFTING RESIDENTIAL SEWAGE EFFLUENT AT A RATE OF 70 GPM AT 10.0 GPM OF HEAD.

IF A SEPARATE PUMPING CHAMBER IS UTILIZED, THE CHAMBER SHALL HAVE A MINIMUM WORKING VOLUME OF 250 GALLONS. THE FLOAT LEVELS SHALL BE ADJUSTED TO PROVIDE FOR A 150 GALLON DOSING VOLUME TO THE DISPOSAL FIELD.

ELECTRICAL WORK AND EQUIPMENT SHALL CONFORM TO THE LATEST EDITION OF THE NATIONAL ELECTRICAL CODE.

MECHANICAL COMPONENTS SHALL BE INSTALLED IN A PROPERLY VENTED LOCATION AND ALL VENTS, AIR INTAKES AND AIR HOSES SHALL BE PROTECTED FROM SNOW, ICE OR WATER VAPOR ACCUMULATIONS. INSTALLATION SHALL BE MADE TO MINIMIZE RELEASE OF ODORS.

MECHANICAL COMPONENTS INSTALLED IN OR AT THE SEWAGE TANK SHALL BE PROTECTED AGAINST DAMAGE OR IMPAIRMENT OF EFFICIENCY BY FLOODING, FOAMING OR SURCHARGING. PUMPS MUST BE READILY REMOVABLE FROM THE MANHOLE IN CASE OF PUMP FAILURE.

CONTROL AND ALARM CIRCUITS FOR AERATION SYSTEM AND LIFT PUMP SHALL BE WIRED TO A COMMON ANNUNCIATOR TO BE LOCATED IN THE BASEMENT OR GARAGE OF THE RESIDENCE.

EACH SECTION OF THE LEACHING LINE SHALL BE PROVIDED WITH NOT LESS THAN ONE INSPECTION PORT. THE MINIMUM DIMENSION OF WHICH SHALL BE FOUR (4") INCHES.

THE DISTRIBUTION BOX, SPLITTER BOX AND INSPECTION PORTS SHALL BE BROUGHT TO GRADE AND SHALL BE PROVIDED WITH SECURED COVERS. THE MINIMUM INSIDE DIMENSION OF THE BOX SHALL BE EIGHTEEN (18") INCHES IN WIDTH. THE BOX SHALL BE OF SUFFICIENT DEPTH TO PREVENT OVERFLOWING WHEN SURGED.

SURFACE WATER SHALL BE DIVERTED AWAY FROM THE DISPOSAL FIELD AREAS BY THE USE OF SWALES. CURTAIN DRAINS SHALL BE INSTALLED AS INDICATED ON THE PLAN.

EVAPORATION-TRANSPIRATION TRENCHES SHALL BE COVERED WITH TOPSOIL AND SEEDED. SHRUBBERY SHALL BE PLANTED IN THE AREA OF THE FIELD IN A FASHION TO BEST ASSIST IN TRANSPIRATION.

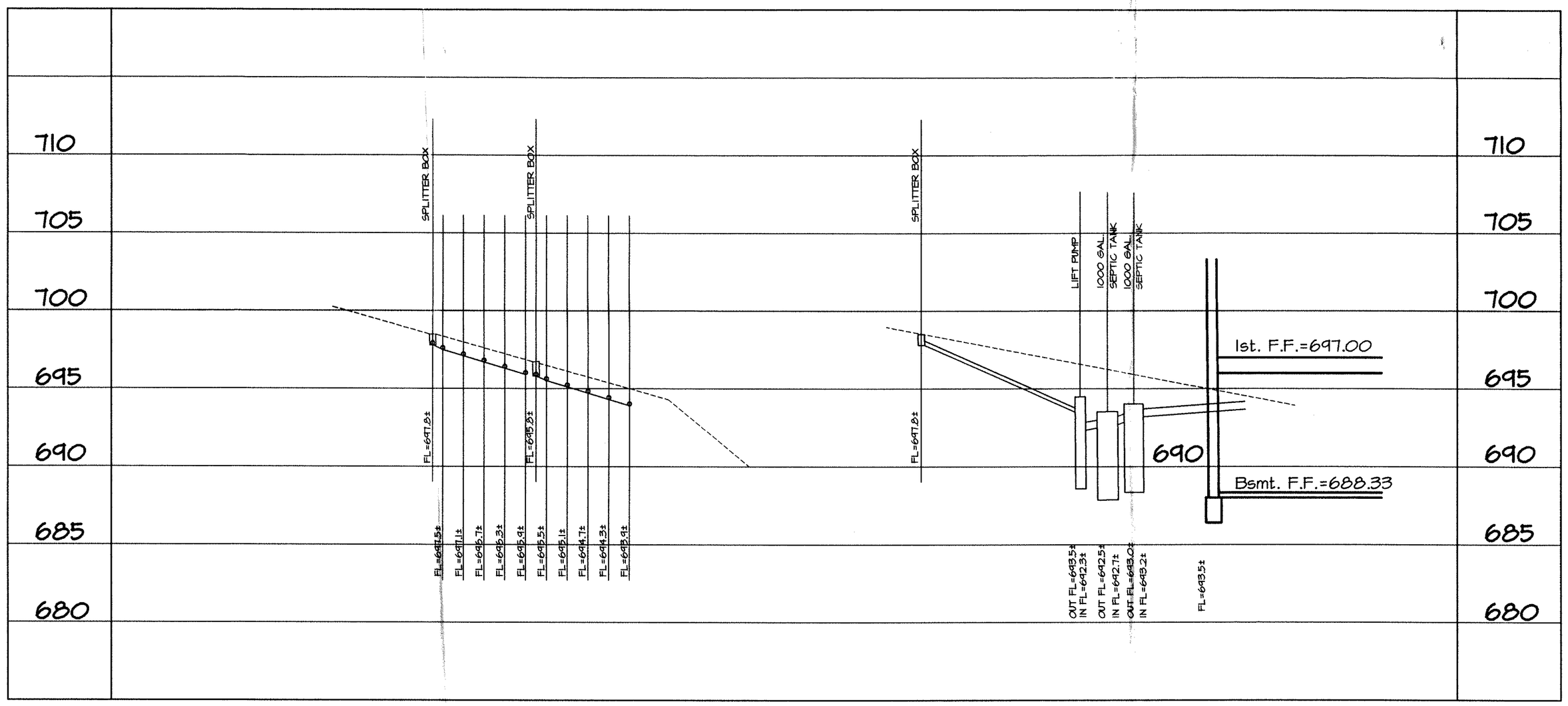

SURVEYOR'S CERTIFICATION

" THIS IS TO CERTIFY THAT AT THE REQUEST OF THE OWNER , I HAVE SURVEYED SUBLOT # 5 IN THE BAIN FARM SUBDIVISION IN ACCORDANCE WITH THE PLAT WHICH IS RECORDED IN VOLUME 24 PAGE 15-1 OF LAKE COUNTY PLAT RECORDS. AT ALL POINTS SO INDICATED , IRON PIN MONUMENTS HERE EITHER FOUND OR SET . DISTANCES SHOWN ARE IN FEET AND DECIMAL PARTS THEREOF , BEARINGS SHOWN ARE BASED UPON ASSUMED MERIDIAN AND ARE FOR THE SOLE PURPOSE OF DESCRIBING THE RELATIVE ANGULAR VALUE BETWEEN LINES . ALL OF WHICH I CERTIFY TO BE CORRECT TO THE BEST OF MY KNOWLEDGE AND BELIEF."

WILLIAM D. LANDES P.S. # 4514 — DATE 12/20/96

CERTIFICATION

" I , THE UNDERSIGNED HEREBY CERTIFY THAT THIS TOPOGRAPHY SHOWN HEREON INDICATED BY 1'-0" CONTOURS AND ELEVATIONS REPRESENTS AN ACTUAL FIELD TOPOGRAPHICAL SURVEY MADE BY ME ON THE 28th. DAY OF FEBRUARY , 1996 AND THAT THE ELEVATIONS WERE TAKEN AT APPROPRIATE INTERVALS AND THAT AS OF THAT DATE THEY EXISTED AS INDICATED HEREON."

WILLIAM D. LANDES P.S. # 4594 — DATE 12/20/96

STATE OF OHIO — WILLIAM D. LANDES S-4594 REGISTERED — PROFESSIONAL SURVEYOR

ZONING PERMIT 0497-8681
ISSUED 4-8-97

SUBJECT TO APPROVAL BY:
Lake County Sanitary Eng. ☐
Lake County Eng. Dept. ☒
Lake County Planning Comm. ☐
Lake County Bldg. Dept. ☒

PRINTED
DEC 24 1996
LAKE INC.

LAKE, INC.
ENGINEERS & SURVEYORS

Rev. No.	Description	Date	By	CH'K'D
	REVISIED PER LAKE COUNTY HEALTH DEPT. ADDED 2-1000 GAL. SEPTIC TANKS	12\24\96	D.Abbott	

SITE PLAN for SIGNATURE HOMES Inc.

Drawn By D.Abbott
Filename: 96-32\96-32
Checked By:

SUBLOT # 5

Scale:
Horiz. 1"= 30'
Vert. 1"= 30'
Sheet No. Of